AURORA PVM2 SERIES

DIMENSIONS AND SPECIFICATIONS
CAST IRON CONSTRUCTION
0.33 – 1.5 HP (.246 – 1.12 kW) PUMPS

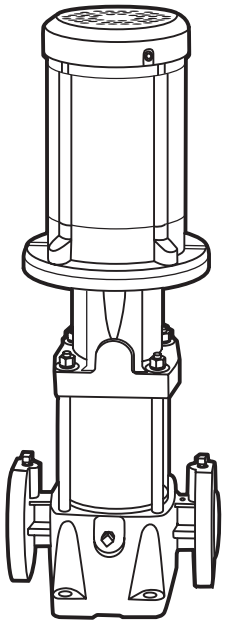

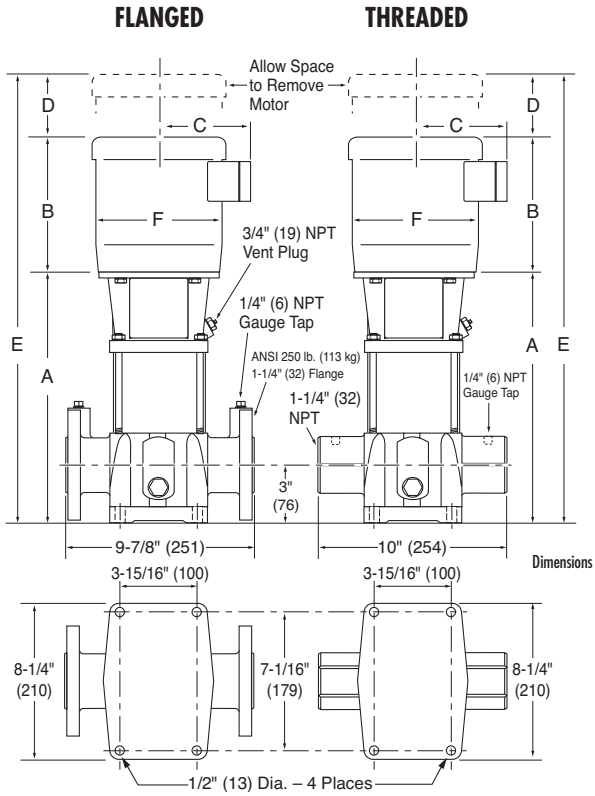

Technical Information	
MINIMUM PUMPING RATES	2 GPM (7.6 LPM)
FLOW RANGE	1 – 16.7 GPM (3.8 – 63.2 LPM)
MIN. SUCTION PIPE SIZES	1-1/4" (32 mm) Nominal Diameter, Schedule 40 Pipe
MAX. WORKING PRESSURE	360 PSI (25 Bar)
MAX. AMBIENT TEMP.	104° F (40° C)
LIQUID TEMP. RANGE	+5° F to +250° F (-15° C to 121° C)
MOTOR OPTIONS	TEFC or ODP
CONSTRUCTION MATERIALS	See Page 16

Dimensions in ( ) are in mm.

1-1/4" (32) ANSI. 250 lb. (113 kg) 4-Bolt Flange

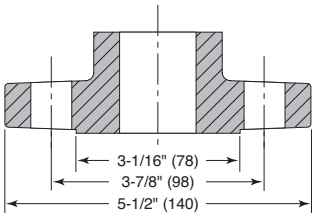

Model Number	HP (kW)	Motor S.F.	ph	Volts	Frame Size	Disc. Size in Inches (mm)	Suction Size in Inches (mm)	Sleeve in Inches (mm)	Dimensions in Inches (mm)* A	B	C	D	E	F	TEFC Wt. Lbs. (kg)
PVM2-30/2D	0.33 (.246)	1.25	1	110/220	56CZ	1.25 (32)	1.25 (32)	1.57 (40)	11.3 (288)	9.3 (236)	4.5 (114)	2.0 (51)	22.6 (575)	6.0 (152)	65 (29)
PVM2-30/2D	0.33 (.246)	1.25	3	190/380	56CZ	1.25 (32)	1.25 (32)	1.57 (40)	11.3 (288)	9.3 (236)	5.2 (132)	2.0 (51)	22.6 (575)	6.2 (157)	76 (34)
PVM2-30D	0.5 (.373)	1.25	1	110/220	56CZ	1.25 (32)	1.25 (32)	1.57 (40)	11.3 (288)	9.3 (236)	4.5 (114)	2.0 (51)	22.6 (575)	6.0 (152)	74 (34)
PVM2-30D	0.5 (.373)	1.25	3	190/380	56CZ	1.25 (32)	1.25 (32)	1.57 (40)	11.3 (288)	9.3 (236)	5.2 (132)	2.0 (51)	22.6 (575)	6.2 (157)	74 (34)
PVM2-40D	0.75 (.559)	1.25	1	110/220	56CZ	1.25 (32)	1.25 (32)	2.28 (58)	12.1 (306)	10.1 (257)	5.3 (135)	2.0 (51)	24.2 (613)	7.2 (183)	81 (37)
PVM2-40D	0.75 (.559)	1.25	3	190/380	56CZ	1.25 (32)	1.25 (32)	2.28 (58)	12.1 (306)	9.3 (236)	5.2 (132)	2.0 (51)	23.4 (593)	6.2 (157)	80 (36)
PVM2-50D	1 (.746)	1.25	1	110/220	56CZ	1.25 (32)	1.25 (32)	2.99 (76)	12.8 (324)	10.1 (257)	5.7 (145)	2.0 (51)	24.9 (631)	7.2 (183)	92 (42)
PVM2-50D	1 (.746)	1.25	3	190/380	56CZ	1.25 (32)	1.25 (32)	2.99 (76)	12.8 (324)	10.1 (257)	5.7 (145)	2.0 (51)	24.9 (631)	7.2 (183)	88 (40)
PVM2-60D	1 (.746)	1.25	1	110/220	56CZ	1.25 (32)	1.25 (32)	3.70 (94)	13.5 (342)	10.1 (257)	5.7 (145)	2.0 (51)	25.6 (649)	7.2 (183)	94 (42)
PVM2-60D	1 (.746)	1.25	3	190/380	56CZ	1.25 (32)	1.25 (32)	3.70 (94)	13.5 (342)	10.1 (257)	5.7 (145)	2.0 (51)	25.6 (649)	7.2 (183)	90 (41)
PVM2-70D	1 (.746)	1.25	1	110/220	56CZ	1.25 (32)	1.25 (32)	4.41 (112)	14.2 (360)	10.1 (257)	5.7 (145)	2.0 (51)	26.3 (667)	7.2 (183)	94 (42)
PVM2-70D	1 (.746)	1.25	3	190/380	56CZ	1.25 (32)	1.25 (32)	4.41 (112)	14.2 (360)	10.1 (257)	5.7 (145)	2.0 (51)	26.3 (667)	7.2 (183)	90 (41)
PVM2-80D	1.5 (1.12)	1.25	1	110/220	56CZ	1.25 (32)	1.25 (32)	5.12 (130)	14.9 (378)	10.1 (257)	5.7 (145)	2.0 (51)	27.0 (685)	7.2 (183)	103 (47)
PVM2-80D	1.5 (1.12)	1.25	3	190/380	56CZ	1.25 (32)	1.25 (32)	5.12 (130)	14.9 (378)	10.1 (257)	5.7 (145)	2.0 (51)	27.0 (685)	7.2 (183)	99 (45)

*Measurements represent the largest number possible for each model using standard efficiency motors.
Weight may vary from published information.

© 2013 Pentair Ltd.

AURORA PVM2 SERIES

DIMENSIONS AND SPECIFICATIONS
CAST IRON CONSTRUCTION
2 – 3 HP (1.49 – 2.24 kW) PUMPS

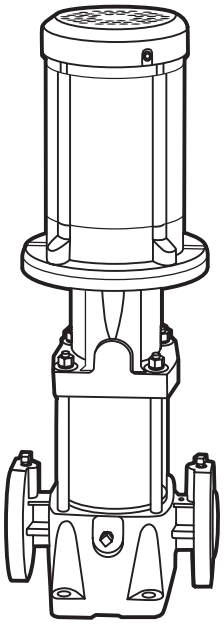

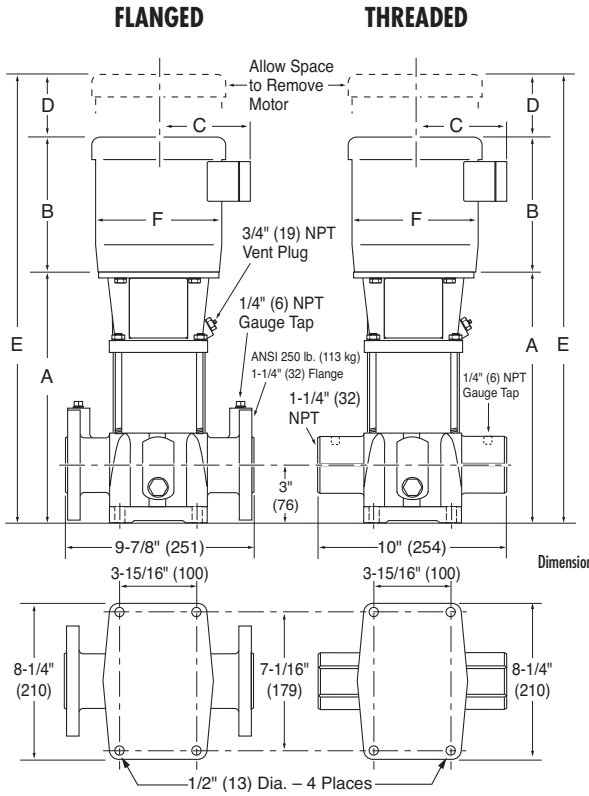

Technical Information	
MINIMUM PUMPING RATES	2 GPM (7.6 LPM)
FLOW RANGE	1 – 16.7 GPM (3.8 – 63.2 LPM)
MIN. SUCTION PIPE SIZES	1-1/4" (32 mm) Nominal Diameter, Schedule 40 Pipe
MAX. WORKING PRESSURE	360 PSI (25 Bar)
MAX. AMBIENT TEMP.	104° F (40° C)
LIQUID TEMP. RANGE	+5° F to +250° F (-15° C to 121° C)
MOTOR OPTIONS	TEFC or ODP
CONSTRUCTION MATERIALS	See Page 16

Dimensions in ( ) are in mm.

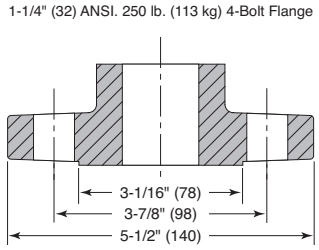

Model Number	HP (kW)	Motor S.F.	ph	Volts	Frame Size	Disc. Size in Inches (mm)	Suction Size in Inches (mm)	Sleeve in Inches (mm)	Dimensions in Inches (mm)* A	B	C	D	E	F	TEFC Wt. Lbs. (kg)
PVM2-90D	1.5 (1.12)	1.4	1	110/220	56CZ	1.25 (32)	1.25 (32)	5.83 (148)	15.8 (401)	12.6 (320)	6.8 (173)	2.6 (66)	31.0 (787)	8.9 (226)	103 (47)
PVM2-90D	1.5 (1.12)	1.4	3	190/380	56CZ	1.25 (32)	1.25 (32)	5.83 (148)	15.8 (401)	12.6 (320)	6.9 (175)	2.6 (66)	31.0 (787)	8.6 (218)	99 (45)
PVM2-100D	2 (1.49)	1.4	1	110/220	182TCZ	1.25 (32)	1.25 (32)	6.54 (166)	16.5 (419)	12.6 (320)	6.8 (173)	2.6 (66)	31.7 (805)	8.9 (226)	140 (64)
PVM2-100D	2 (1.49)	1.4	3	190/380	182TCZ	1.25 (32)	1.25 (32)	6.54 (166)	16.5 (419)	12.6 (320)	6.9 (175)	2.6 (66)	31.7 (805)	8.6 (218)	120 (55)
PVM2-110D	2 (1.49)	1.4	1	110/220	182TCZ	1.25 (32)	1.25 (32)	7.24 (184)	17.2 (437)	12.6 (320)	6.8 (173)	2.6 (66)	32.4 (823)	8.9 (226)	142 (64)
PVM2-110D	2 (1.49)	1.4	3	190/380	182TCZ	1.25 (32)	1.25 (32)	7.24 (184)	17.2 (437)	12.6 (320)	6.9 (175)	2.6 (66)	32.4 (823)	8.6 (218)	122 (55)
PVM2-120D	2 (1.49)	1.4	1	110/220	182TCZ	1.25 (32)	1.25 (32)	7.95 (202)	17.9 (455)	12.6 (320)	6.8 (173)	2.6 (66)	33.1 (841)	8.9 (226)	143 (65)
PVM2-120D	2 (1.49)	1.4	3	190/380	182TCZ	1.25 (32)	1.25 (32)	7.95 (202)	17.9 (455)	12.6 (320)	6.9 (175)	2.6 (66)	33.1 (841)	8.6 (218)	123 (56)
PVM2-130D	2 (1.49)	1.4	1	110/220	213TCZ	1.25 (32)	1.25 (32)	8.66 (220)	18.6 (472)	13.9 (353)	7.9 (201)	2.6 (66)	35.1 (892)	10.0 (254)	148 (67)
PVM2-130D	2 (1.49)	1.4	3	190/380	184TCZ	1.25 (32)	1.25 (32)	8.66 (220)	18.6 (472)	12.6 (320)	6.9 (175)	2.6 (66)	33.8 (859)	8.6 (218)	128 (58)
PVM2-140D	2 (1.49)	1.4	1	110/220	213TCZ	1.25 (32)	1.25 (32)	9.37 (238)	19.3 (490)	13.9 (353)	7.9 (201)	2.6 (66)	35.8 (909)	10.0 (254)	149 (68)
PVM2-140D	2 (1.49)	1.4	3	190/380	184TCZ	1.25 (32)	1.25 (32)	9.37 (238)	19.3 (490)	12.6 (320)	6.9 (175)	2.6 (66)	34.5 (876)	8.6 (218)	129 (59)
PVM2-150D	3 (2.24)	1.4	1	110/220	182TCZ	1.25 (32)	1.25 (32)	10.08 (256)	20.0 (508)	13.9 (353)	7.9 (201)	2.6 (66)	36.5 (927)	10.0 (254)	171 (78)
PVM2-150D	3 (2.24)	1.4	3	190/380	182TCZ	1.25 (32)	1.25 (32)	10.08 (256)	20.0 (508)	12.6 (320)	6.9 (175)	2.6 (66)	35.2 (894)	8.6 (218)	145 (66)
PVM2-160D	3 (2.24)	1.4	1	110/220	182TCZ	1.25 (32)	1.25 (32)	10.79 (274)	20.8 (528)	13.9 (353)	7.9 (201)	2.6 (66)	37.3 (947)	10.0 (254)	172 (78)
PVM2-160D	3 (2.24)	1.4	3	190/380	182TCZ	1.25 (32)	1.25 (32)	10.79 (274)	20.8 (528)	12.6 (320)	6.9 (175)	2.6 (66)	36.0 (914)	8.6 (218)	146 (66)
PVM2-170D	3 (2.24)	1.4	1	110/220	213TCZ	1.25 (32)	1.25 (32)	11.50 (292)	21.5 (546)	13.9 (353)	7.9 (201)	2.6 (66)	38.0 (965)	10.0 (254)	174 (79)
PVM2-170D	3 (2.24)	1.4	3	190/380	184TCZ	1.25 (32)	1.25 (32)	11.50 (292)	21.5 (546)	12.6 (320)	6.9 (175)	2.6 (66)	36.7 (932)	8.6 (218)	148 (67)
PVM2-180D	3 (2.24)	1.4	1	110/220	213TCZ	1.25 (32)	1.25 (32)	12.20 (310)	22.2 (564)	13.9 (353)	7.9 (201)	2.6 (66)	38.7 (983)	10.0 (254)	175 (79)
PVM2-180D	3 (2.24)	1.4	3	190/380	184TCZ	1.25 (32)	1.25 (32)	12.20 (310)	22.2 (564)	12.6 (320)	6.9 (175)	2.6 (66)	37.4 (950)	8.6 (218)	149 (67)
PVM2-220D	3 (2.24)	1.4	1	110/220	213TCZ	1.25 (32)	1.25 (32)	15.04 (382)	25.0 (635)	13.9 (353)	7.9 (201)	2.6 (66)	41.5 (1054)	10.0 (254)	179 (81)
PVM2-220D	3 (2.24)	1.4	3	190/380	184TCZ	1.25 (32)	1.25 (32)	15.04 (382)	25.0 (635)	12.6 (320)	6.9 (175)	2.6 (66)	40.2 (1021)	8.6 (218)	153 (70)
PVM2-260D	3 (2.24)	1.4	1	110/220	213TCZ	1.25 (32)	1.25 (32)	17.87 (454)	27.8 (706)	13.9 (353)	7.9 (201)	2.6 (66)	44.3 (1125)	10.0 (254)	184 (84)
PVM2-260D	3 (2.24)	1.4	3	190/380	184TCZ	1.25 (32)	1.25 (32)	17.87 (454)	27.8 (706)	12.6 (320)	6.9 (175)	2.6 (66)	43.0 (1092)	8.6 (218)	158 (72)

*Measurements represent the largest number possible for each model using standard efficiency motors.
Weight may vary from published information.

© 2013 Pentair Ltd.

AURORA PVMX2 SERIES

DIMENSIONS AND SPECIFICATIONS

316 SS CONSTRUCTION

0.33 – 1.5 HP (.246 – 1.12 kW) PUMPS

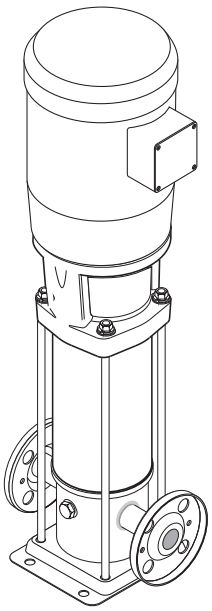

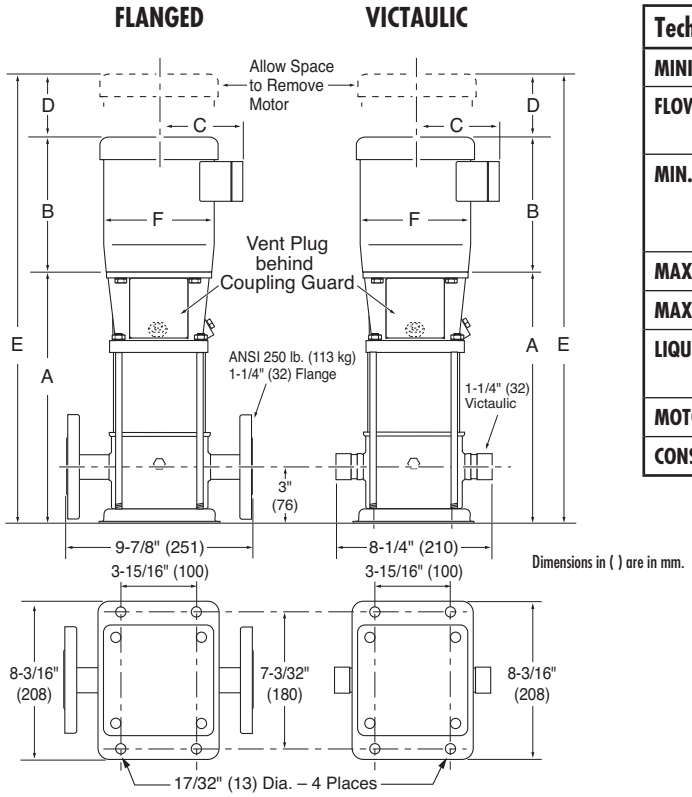

Dimensions in ( ) are in mm.

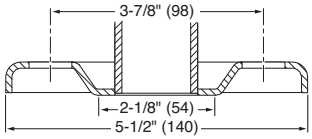

Technical Information	
MINIMUM PUMPING RATES	2 GPM (7.6 LPM)
FLOW RANGE	1 – 16.7 GPM (3.8 – 63.2 LPM)
MIN. SUCTION PIPE SIZES	1-1/4" (32 mm) Nominal Diameter, Schedule 40 Pipe
MAX. WORKING PRESSURE	360 PSI (25 Bar)
MAX. AMBIENT TEMP.	104° F (40° C)
LIQUID TEMP. RANGE	+5° F to +250° F (-15° C to 121° C)
MOTOR OPTIONS	TEFC or ODP
CONSTRUCTION MATERIALS	See Page 16

Model Number	HP (kW)	Motor S.F.	ph	Volts	Frame Size	Disc. Size in Inches (mm)	Suction Size in Inches (mm)	Sleeve in Inches (mm)	Dimensions in Inches (mm)*						TEFC Wt. Lbs. (kg)
									A	B	C	D	E	F	
PVM(I/X)2-30/2D	0.33 (.246)	1.25	1	110/220	56CZ	1.25 (32)	1.25 (32)	1.57 (40)	11.9 (303)	9.3 (236)	4.5 (114)	2.0 (51)	23.2 (589)	6.0 (152)	51 (23)
PVM(I/X)2-30/2D	0.33 (.246)	1.25	3	190/380	56CZ	1.25 (32)	1.25 (32)	1.57 (40)	11.9 (303)	9.3 (236)	5.2 (132)	2.0 (51)	23.2 (589)	6.2 (157)	62 (28)
PVM(I/X)2-30D	0.50 (.373)	1.25	1	110/220	56CZ	1.25 (32)	1.25 (32)	1.57 (40)	11.9 (303)	9.3 (236)	4.5 (114)	2.0 (51)	23.2 (589)	6.0 (152)	61 (27)
PVM(I/X)2-30D	0.50 (.373)	1.25	3	190/380	56CZ	1.25 (32)	1.25 (32)	1.57 (40)	11.9 (303)	9.3 (236)	5.2 (132)	2.0 (51)	23.2 (589)	6.2 (157)	61 (27)
PVM(I/X)2-40D	0.75 (.559)	1.25	1	110/220	56CZ	1.25 (32)	1.25 (32)	2.28 (58)	12.6 (321)	10.1 (257)	5.3 (135)	2.0 (51)	24.7 (627)	7.2 (183)	68 (31)
PVM(I/X)2-40D	0.75 (.559)	1.25	3	190/380	56CZ	1.25 (32)	1.25 (32)	2.28 (58)	12.6 (321)	9.3 (236)	5.2 (132)	2.0 (51)	23.9 (607)	6.2 (157)	67 (30)
PVM(I/X)2-50D	1 (.746)	1.25	1	110/220	56CZ	1.25 (32)	1.25 (32)	2.99 (76)	13.3 (339)	10.1 (257)	5.7 (145)	2.0 (51)	25.4 (645)	7.2 (183)	79 (36)
PVM(I/X)2-50D	1 (.746)	1.25	3	190/380	56CZ	1.25 (32)	1.25 (32)	2.99 (76)	13.3 (339)	10.1 (257)	5.7 (145)	2.0 (51)	25.4 (645)	7.2 (183)	75 (34)
PVM(I/X)2-60D	1 (.746)	1.25	1	110/220	56CZ	1.25 (32)	1.25 (32)	3.70 (94)	14.1 (357)	10.1 (257)	5.7 (145)	2.0 (51)	26.2 (665)	7.2 (183)	80 (36)
PVM(I/X)2-60D	1 (.746)	1.25	3	190/380	56CZ	1.25 (32)	1.25 (32)	3.70 (94)	14.1 (357)	10.1 (257)	5.7 (145)	2.0 (51)	26.2 (665)	7.2 (183)	76 (35)
PVM(I/X)2-70D	1 (.746)	1.25	1	110/220	56CZ	1.25 (32)	1.25 (32)	4.41 (112)	14.8 (375)	10.1 (257)	5.7 (145)	2.0 (51)	26.9 (683)	7.2 (183)	94 (42)
PVM(I/X)2-70D	1 (.746)	1.25	3	190/380	56CZ	1.25 (32)	1.25 (32)	4.41 (112)	14.8 (375)	10.1 (257)	5.7 (145)	2.0 (51)	26.9 (683)	7.2 (183)	90 (41)
PVM(I/X)2-80D	1.5 (1.12)	1.25	1	110/220	56CZ	1.25 (32)	1.25 (32)	5.12 (130)	15.5 (393)	10.1 (257)	5.7 (145)	2.0 (51)	27.6 (701)	7.2 (183)	103 (47)
PVM(I/X)2-80D	1.5 (1.12)	1.25	3	190/380	56CZ	1.25 (32)	1.25 (32)	5.12 (130)	15.5 (393)	10.1 (257)	5.7 (145)	2.0 (51)	27.6 (701)	7.2 (183)	99 (45)

*Measurements represent the largest number possible for each model using standard efficiency motors.

© 2013 Pentair Ltd.

AURORA PVMX2 SERIES

DIMENSIONS AND SPECIFICATIONS

316 SS CONSTRUCTION

2 – 3 HP (1.49 – 2.24 kW) PUMPS

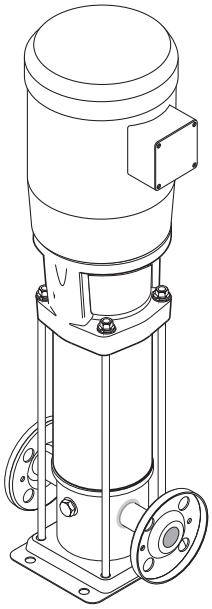

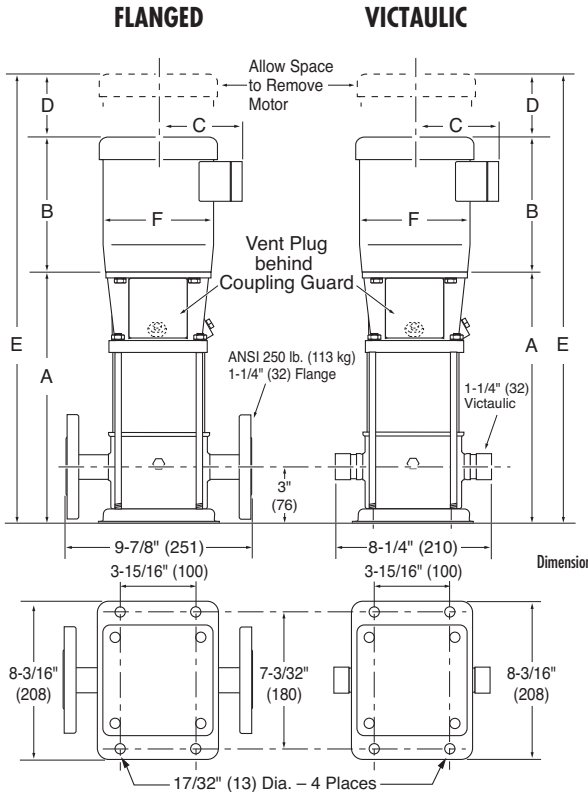

Dimensions in ( ) are in mm.

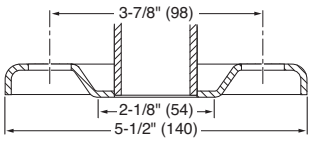

Technical Information	
MINIMUM PUMPING RATES	2 GPM (7.6 LPM)
FLOW RANGE	1 – 16.7 GPM (3.8 – 63.2 LPM)
MIN. SUCTION PIPE SIZES	1-1/4" (32 mm) Nominal Diameter, Schedule 40 Pipe
MAX. WORKING PRESSURE	360 PSI (25 Bar)
MAX. AMBIENT TEMP.	104° F (40° C)
LIQUID TEMP. RANGE	+5° F to +250° F (-15° C to 121° C)
MOTOR OPTIONS	TEFC or ODP
CONSTRUCTION MATERIALS	See Page 16

Model Number	HP (kW)	Motor S.F.	ph	Volts	Frame Size	Disc. Size in Inches (mm)	Suction Size in Inches (mm)	Sleeve in Inches (mm)	Dimensions in Inches (mm)*						TEFC Wt. Lbs. (kg)
									A	B	C	D	E	F	
PVM(I/X)2-90D	1.5 (1.12)	1.4	1	110/220	56CZ	1.25 (32)	1.25 (32)	5.83 (148)	16.2 (411)	12.6 (320)	6.8 (173)	2.6 (66)	31.4 (798)	8.9 (226)	103 (47)
PVM(I/X)2-90D	1.5 (1.12)	1.4	3	190/380	56CZ	1.25 (32)	1.25 (32)	5.83 (148)	16.2 (411)	12.6 (320)	6.9 (175)	2.6 (66)	31.4 (798)	8.6 (218)	99 (45)
PVM(I/X)2-100D	2 (1.49)	1.4	1	110/220	182TCZ	1.25 (32)	1.25 (32)	6.54 (166)	16.9 (429)	12.6 (320)	6.8 (173)	2.6 (66)	32.1 (815)	8.9 (226)	127 (58)
PVM(I/X)2-100D	2 (1.49)	1.4	3	190/380	182TCZ	1.25 (32)	1.25 (32)	6.54 (166)	16.9 (429)	12.6 (320)	6.9 (175)	2.6 (66)	32.1 (815)	8.6 (218)	107 (48)
PVM(I/X)2-110D	2 (1.49)	1.4	1	110/220	182TCZ	1.25 (32)	1.25 (32)	7.24 (184)	17.6 (447)	12.6 (320)	6.8 (173)	2.6 (66)	32.8 (833)	8.9 (226)	128 (58)
PVM(I/X)2-110D	2 (1.49)	1.4	3	190/380	182TCZ	1.25 (32)	1.25 (32)	7.24 (184)	17.6 (447)	12.6 (320)	6.9 (175)	2.6 (66)	32.8 (833)	8.6 (218)	108 (49)
PVM(I/X)2-120D	2 (1.49)	1.4	1	110/220	182TCZ	1.25 (32)	1.25 (32)	7.95 (202)	18.3 (465)	12.6 (320)	6.8 (173)	2.6 (66)	33.5 (851)	8.9 (226)	129 (59)
PVM(I/X)2-120D	2 (1.49)	1.4	3	190/380	182TCZ	1.25 (32)	1.25 (32)	7.95 (202)	18.3 (465)	12.6 (320)	6.9 (175)	2.6 (66)	33.5 (851)	8.6 (218)	109 (50)
PVM(I/X)2-130D	3 (2.24)	1.4	1	110/220	182TCZ	1.25 (32)	1.25 (32)	8.66 (220)	19.0 (483)	13.9 (353)	7.9 (201)	2.6 (66)	35.5 (902)	10.0 (254)	134 (61)
PVM(I/X)2-130D	3 (2.24)	1.4	3	190/380	182TCZ	1.25 (32)	1.25 (32)	8.66 (220)	19.0 (483)	12.6 (320)	6.9 (175)	2.6 (66)	34.2 (869)	8.6 (218)	114 (52)
PVM(I/X)2-140D	3 (2.24)	1.4	1	110/220	182TCZ	1.25 (32)	1.25 (32)	9.37 (238)	19.7 (501)	13.9 (353)	7.9 (201)	2.6 (66)	36.2 (919)	10.0 (254)	135 (61)
PVM(I/X)2-140D	3 (2.24)	1.4	3	190/380	182TCZ	1.25 (32)	1.25 (32)	9.37 (238)	19.7 (501)	12.6 (320)	6.9 (175)	2.6 (66)	34.9 (886)	8.6 (218)	115 (52)
PVM(I/X)2-150D	3 (2.24)	1.4	1	110/220	213TCZ	1.25 (32)	1.25 (32)	10.08 (256)	20.4 (519)	13.9 (353)	7.9 (201)	2.6 (66)	36.9 (937)	10.0 (254)	158 (71)
PVM(I/X)2-150D	3 (2.24)	1.4	3	190/380	184TCZ	1.25 (32)	1.25 (32)	10.08 (256)	20.4 (519)	12.6 (320)	6.9 (175)	2.6 (66)	35.6 (904)	8.6 (218)	132 (60)
PVM(I/X)2-160D	3 (2.24)	1.4	1	110/220	213TCZ	1.25 (32)	1.25 (32)	10.79 (274)	21.1 (537)	13.9 (353)	7.9 (201)	2.6 (66)	37.6 (955)	10.0 (254)	159 (72)
PVM(I/X)2-160D	3 (2.24)	1.4	3	190/380	184TCZ	1.25 (32)	1.25 (32)	10.79 (274)	21.1 (537)	12.6 (320)	6.9 (175)	2.6 (66)	36.3 (922)	8.6 (218)	133 (60)
PVM(I/X)2-170D	3 (2.24)	1.4	1	110/220	213TCZ	1.25 (32)	1.25 (32)	11.50 (292)	21.8 (555)	13.9 (353)	7.9 (201)	2.6 (66)	38.3 (973)	10.0 (254)	160 (73)
PVM(I/X)2-170D	3 (2.24)	1.4	3	190/380	184TCZ	1.25 (32)	1.25 (32)	11.50 (292)	21.8 (555)	12.6 (320)	6.9 (175)	2.6 (66)	37.0 (940)	8.6 (218)	134 (61)
PVM(I/X)2-180D	3 (2.24)	1.4	1	110/220	213TCZ	1.25 (32)	1.25 (32)	12.20 (310)	22.6 (573)	13.9 (353)	7.9 (201)	2.6 (66)	39.1 (993)	10.0 (254)	161 (73)
PVM(I/X)2-180D	3 (2.24)	1.4	3	190/380	184TCZ	1.25 (32)	1.25 (32)	12.20 (310)	22.6 (573)	12.6 (320)	6.9 (175)	2.6 (66)	37.8 (960)	8.6 (218)	135 (61)
PVM(I/X)2-220D	3 (2.24)	1.4	1	110/220	213TCZ	1.25 (32)	1.25 (32)	15.04 (382)	25.4 (645)	13.9 (353)	7.9 (201)	2.6 (66)	41.9 (1064)	10.0 (254)	166 (75)
PVM(I/X)2-220D	3 (2.24)	1.4	3	190/380	184TCZ	1.25 (32)	1.25 (32)	15.04 (382)	25.4 (645)	12.6 (320)	6.9 (175)	2.6 (66)	40.6 (1031)	8.6 (218)	140 (63)
PVM(I/X)2-260D	3 (2.24)	1.4	1	110/220	213TCZ	1.25 (32)	1.25 (32)	17.87 (454)	28.2 (717)	13.9 (353)	7.9 (201)	2.6 (66)	44.7 (1135)	10.0 (254)	171 (77)
PVM(I/X)2-260D	3 (2.24)	1.4	3	190/380	184TCZ	1.25 (32)	1.25 (32)	17.87 (454)	28.2 (717)	12.6 (320)	6.9 (175)	2.6 (66)	43.4 (1102)	8.6 (218)	145 (66)

*Measurements represent the largest number possible for each model using standard efficiency motors.

© 2013 Pentair Ltd.

AURORA PVM4 SERIES

DIMENSIONS AND SPECIFICATIONS
CAST IRON CONSTRUCTION
0.33 – 1.5 HP (.246 – 1.12 kW) PUMPS

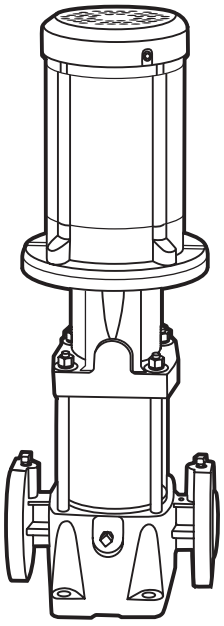

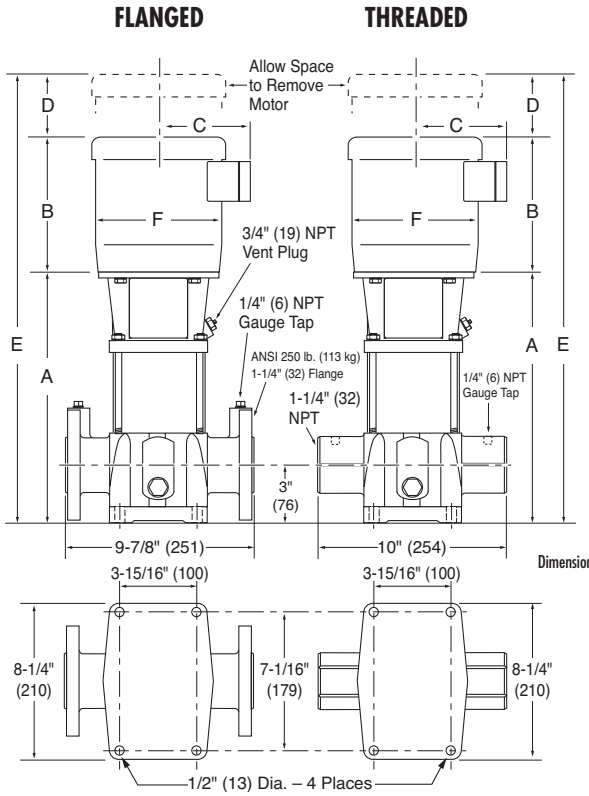

TECHNICAL INFORMATION	
MINIMUM PUMPING RATES	2.5 GPM (9.5 LPM)
FLOW RANGE	2.5 – 33 GPM (9.5 – 124.9 LPM)
MIN. SUCTION PIPE SIZES	1-1/4" (32 mm) Nominal Diameter, Schedule 40 Pipe
MAX. WORKING PRESSURE	360 PSI (25 Bar)
MAX. AMBIENT TEMP.	104° F (40° C)
LIQUID TEMP. RANGE	+5° F to +250° F (-15° C to 121° C)
MOTOR OPTIONS	TEFC or ODP
CONSTRUCTION MATERIALS	See Page 16

Dimensions in ( ) are in mm.

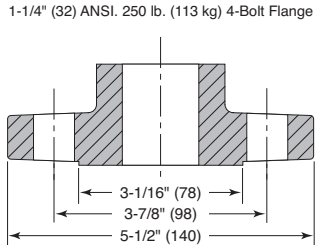

Model Number	HP (kW)	Motor S.F.	ph	Volts	Frame Size	Disc. Size in Inches (mm)	Suction Size in Inches (mm)	Sleeve in Inches (mm)	Dimensions in Inches (mm)* A	B	C	D	E	F	TEFC Wt. Lbs. (kg)
PVM4-20/1D	0.33 (.246)	1.25	1	110/220	56CZ	1.25 (32)	1.25 (32)	1.57 (40)	11.3 (287)	9.3 (236)	4.5 (114)	2.0 (51)	22.6 (574)	6.0 (152)	64 (29)
PVM4-20/1D	0.33 (.246)	1.25	3	190/380	56CZ	1.25 (32)	1.25 (32)	1.57 (40)	11.3 (287)	9.3 (236)	5.2 (132)	2.0 (51)	22.6 (574)	6.2 (157)	75 (34)
PVM4-20D	0.50 (.373)	1.25	1	110/220	56CZ	1.25 (32)	1.25 (32)	1.57 (40)	11.3 (287)	9.3 (236)	4.5 (114)	2.0 (51)	22.6 (574)	6.0 (152)	73 (33)
PVM4-20D	0.50 (.373)	1.25	3	190/380	56CZ	1.25 (32)	1.25 (32)	1.57 (40)	11.3 (287)	9.3 (236)	5.2 (132)	2.0 (51)	22.6 (574)	6.2 (157)	73 (33)
PVM4-30D	0.75 (.559)	1.25	1	110/220	56CZ	1.25 (32)	1.25 (32)	2.64 (67)	12.4 (315)	10.1 (257)	5.3 (135)	2.0 (51)	24.5 (622)	7.2 (183)	80 (36)
PVM4-30D	0.75 (.559)	1.25	3	190/380	56CZ	1.25 (32)	1.25 (32)	2.64 (67)	12.4 (315)	9.3 (236)	5.2 (132)	2.0 (51)	23.7 (602)	6.2 (157)	79 (36)
PVM4-40D	1 (.746)	1.25	1	110/220	56CZ	1.25 (32)	1.25 (32)	3.70 (94)	13.5 (343)	10.1 (257)	5.7 (145)	2.0 (51)	25.6 (650)	7.2 (183)	92 (42)
PVM4-40D	1 (.746)	1.25	3	190/380	56CZ	1.25 (32)	1.25 (32)	3.70 (94)	13.5 (343)	10.1 (257)	5.7 (145)	2.0 (51)	25.6 (650)	7.2 (183)	88 (40)
PVM4-50D	1.5 (1.12)	1.25	1	110/220	56CZ	1.25 (32)	1.25 (32)	4.76 (121)	14.5 (368)	10.1 (257)	5.7 (145)	2.0 (51)	26.6 (676)	7.2 (183)	100 (45)
PVM4-50D	1.5 (1.12)	1.25	3	190/380	56CZ	1.25 (32)	1.25 (32)	4.76 (121)	14.5 (368)	10.1 (257)	5.7 (145)	2.0 (51)	26.6 (676)	7.2 (183)	96 (44)

*Measurements represent the largest number possible for each model using standard efficiency motors.

© 2013 Pentair Ltd.

AURORA PVM4 SERIES

DIMENSIONS AND SPECIFICATIONS
CAST IRON CONSTRUCTION
2 – 7.5 HP (1.49 – 5.59 kW) PUMPS

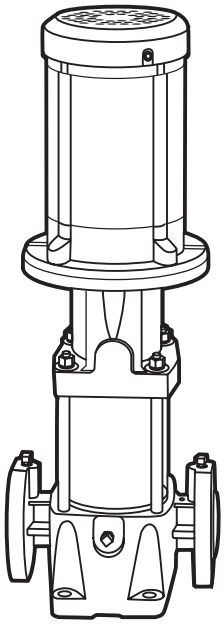

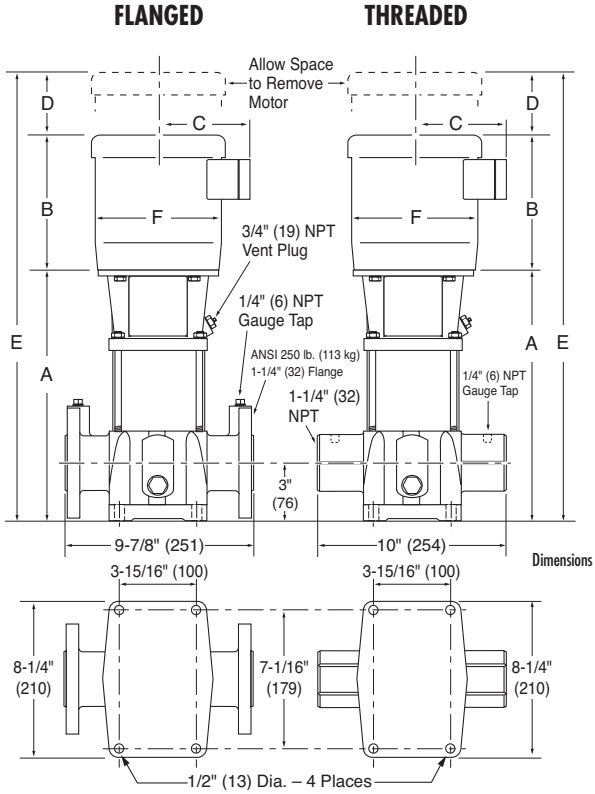

Dimensions in ( ) are in mm.

TECHNICAL INFORMATION	
MINIMUM PUMPING RATES	2.5 GPM (9.5 LPM)
FLOW RANGE	2.5 – 33 GPM (9.5 – 124.9 LPM)
MIN. SUCTION PIPE SIZES	1-1/4" (32 mm) Nominal Diameter, Schedule 40 Pipe
MAX. WORKING PRESSURE	360 PSI (25 Bar)
MAX. AMBIENT TEMP.	104° F (40° C)
LIQUID TEMP. RANGE	+5° F to +250° F (-15° C to 121° C)
MOTOR OPTIONS	TEFC or ODP
CONSTRUCTION MATERIALS	See Page 16

1-1/4" (32) ANSI. 250 lb. (113 kg) 4-Bolt Flange

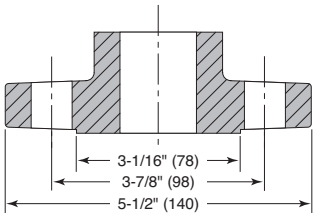

Model Number	HP (kW)	Motor S.F.	ph	Volts	Frame Size	Disc. Size in Inches (mm)	Suction Size in Inches (mm)	Sleeve in Inches (mm)	Dimensions in Inches (mm)*						TEFC Wt. Lbs. (kg)
									A	B	C	D	E	F	
PVM4-60D	2 (1.49)	1.4	1	110/220	182TCZ	1.25 (32)	1.25 (32)	5.83 (148)	15.8 (401)	13.9 (353)	7.9 (201)	2.6 (66)	32.3 (820)	10.0 (254)	140 (64)
PVM4-60D	2 (1.49)	1.4	3	190/380	182TCZ	1.25 (32)	1.25 (32)	5.83 (148)	15.8 (401)	12.6 (320)	6.9 (175)	2.6 (66)	31.0 (787)	8.6 (218)	120 (54)
PVM4-80/7D	2 (1.49)	1.4	1	110/220	182TCZ	1.25 (32)	1.25 (32)	7.95 (202)	17.9 (455)	13.9 (353)	7.9 (201)	2.6 (66)	34.4 (874)	10.0 (254)	143 (65)
PVM4-80/7D	2 (1.49)	1.4	3	190/380	182TCZ	1.25 (32)	1.25 (32)	7.95 (202)	17.9 (455)	12.6 (320)	6.9 (175)	2.6 (66)	33.1 (841)	8.6 (218)	123 (56)
PVM4-80D	2 (1.49)	1.4	1	110/220	182TCZ	1.25 (32)	1.25 (32)	7.95 (202)	17.9 (455)	13.9 (353)	7.9 (201)	2.6 (66)	34.4 (874)	10.0 (254)	143 (65)
PVM4-80D	2 (1.49)	1.4	3	190/380	182TCZ	1.25 (32)	1.25 (32)	7.95 (202)	17.9 (455)	12.6 (320)	6.9 (175)	2.6 (66)	33.1 (841)	8.6 (218)	123 (56)
PVM4-90D	3 (2.24)	1.4	1	110/220	213TCZ	1.25 (32)	1.25 (32)	9.02 (229)	19.0 (482)	13.9 (353)	7.9 (201)	2.6 (66)	35.5 (902)	10.0 (254)	165 (75)
PVM4-90D	3 (2.24)	1.4	3	190/380	184TCZ	1.25 (32)	1.25 (32)	9.02 (229)	19.0 (482)	12.6 (320)	6.9 (175)	2.6 (66)	34.2 (869)	8.6 (218)	139 (63)
PVM4-100D	3 (2.24)	1.4	1	110/220	213TCZ	1.25 (32)	1.25 (32)	10.08 (256)	20.0 (509)	13.9 (353)	7.9 (201)	2.6 (66)	36.5 (927)	10.0 (254)	166 (75)
PVM4-100D	3 (2.24)	1.4	3	190/380	184TCZ	1.25 (32)	1.25 (32)	10.08 (256)	20.0 (509)	12.6 (320)	6.9 (175)	2.6 (66)	35.2 (894)	8.6 (218)	140 (64)
PVM4-110D	3 (2.24)	1.4	1	110/220	213TCZ	1.25 (32)	1.25 (32)	11.14 (283)	21.1 (536)	13.9 (353)	7.9 (201)	2.6 (66)	37.6 (955)	10.0 (254)	167 (76)
PVM4-110D	3 (2.24)	1.4	3	190/380	184TCZ	1.25 (32)	1.25 (32)	11.14 (283)	21.1 (536)	12.6 (320)	6.9 (175)	2.6 (66)	36.3 (922)	8.6 (218)	141 (64)
PVM4-120D	3 (2.24)	1.4	1	110/220	213TCZ	1.25 (32)	1.25 (32)	12.20 (310)	22.2 (563)	13.9 (353)	7.9 (201)	2.6 (66)	38.7 (983)	10.0 (254)	169 (77)
PVM4-120D	3 (2.24)	1.4	3	190/380	184TCZ	1.25 (32)	1.25 (32)	12.20 (310)	22.2 (563)	12.6 (320)	6.9 (175)	2.6 (66)	37.4 (950)	8.6 (218)	143 (65)
PVM4-130D	3 (2.24)	1.4	1	110/220	213TCZ	1.25 (32)	1.25 (32)	13.27 (337)	23.2 (590)	13.9 (353)	7.9 (201)	2.6 (66)	39.7 (1008)	10.0 (254)	170 (77)
PVM4-130D	3 (2.24)	1.4	3	190/380	184TCZ	1.25 (32)	1.25 (32)	13.27 (337)	23.2 (590)	12.6 (320)	6.9 (175)	2.6 (66)	38.4 (975)	8.6 (218)	144 (65)
PVM4-140D	3 (2.24)	1.4	1	110/220	213TCZ	1.25 (32)	1.25 (32)	14.33 (364)	24.3 (617)	13.9 (353)	7.9 (201)	2.6 (66)	40.8 (1036)	10.0 (254)	171 (78)
PVM4-140D	3 (2.24)	1.4	3	190/380	184TCZ	1.25 (32)	1.25 (32)	14.33 (364)	24.3 (617)	12.6 (320)	6.9 (175)	2.6 (66)	39.5 (1003)	8.6 (218)	145 (66)
PVM4-150D	5 (3.73)	1.4	1	110/220	213TCZ	1.25 (32)	1.25 (32)	15.39 (391)	25.4 (644)	13.9 (353)	7.9 (201)	2.6 (66)	41.9 (1064)	10.0 (254)	187 (85)
PVM4-150D	5 (3.73)	1.4	3	190/380	213TCZ	1.25 (32)	1.25 (32)	15.39 (391)	25.4 (644)	13.9 (353)	8.1 (206)	2.6 (66)	41.9 (1064)	10.3 (262)	191 (86)
PVM4-160D	5 (3.73)	1.4	1	110/220	213TCZ	1.25 (32)	1.25 (32)	16.46 (418)	26.4 (671)	13.9 (353)	7.9 (201)	2.6 (66)	42.9 (1090)	10.0 (254)	188 (85)
PVM4-160D	5 (3.73)	1.4	3	190/380	213TCZ	1.25 (32)	1.25 (32)	16.46 (418)	26.4 (671)	13.9 (353)	8.1 (206)	2.6 (66)	42.9 (1090)	10.3 (262)	192 (87)
PVM4-190D	5 (3.73)	1.4	1	110/220	213TCZ	1.25 (32)	1.25 (32)	19.65 (499)	29.6 (752)	13.9 (353)	7.9 (201)	2.6 (66)	46.1 (1171)	10.0 (254)	192 (87)
PVM4-190D	5 (3.73)	1.4	3	190/380	213TCZ	1.25 (32)	1.25 (32)	19.65 (499)	29.6 (752)	13.9 (353)	8.1 (206)	2.6 (66)	46.1 (1171)	10.3 (262)	196 (89)
PVM4-220D	5 (3.73)	1.4	1	110/220	213TCZ	1.25 (32)	1.25 (32)	22.83 (580)	32.8 (833)	13.9 (353)	7.9 (201)	2.6 (66)	49.3 (1252)	10.0 (254)	195 (89)
PVM4-220D	5 (3.73)	1.4	3	190/380	213TCZ	1.25 (32)	1.25 (32)	22.83 (580)	32.8 (833)	13.9 (353)	8.1 (206)	2.6 (66)	49.3 (1252)	10.3 (262)	199 (90)
PVM4-240D	7.5 (5.59)	1.15	1	110/220	213TCZ	1.25 (32)	1.25 (32)	24.96 (634)	34.9 (887)	13.9 (353)	7.9 (201)	3.1 (79)	51.9 (1318)	10.0 (254)	228 (103)
PVM4-240D	7.5 (5.59)	1.15	3	190/380	213TCZ	1.25 (32)	1.25 (32)	24.96 (634)	34.9 (887)	13.9 (353)	8.1 (206)	3.1 (79)	51.9 (1318)	10.3 (262)	225 (102)
PVM4-260D	7.5 (5.59)	1.15	1	110/220	213TCZ	1.25 (32)	1.25 (32)	27.09 (688)	37.1 (941)	13.9 (353)	7.9 (201)	3.1 (79)	54.1 (1374)	10.0 (254)	230 (105)
PVM4-260D	7.5 (5.59)	1.15	3	190/380	213TCZ	1.25 (32)	1.25 (32)	27.09 (688)	37.1 (941)	13.9 (353)	8.1 (206)	3.1 (79)	54.1 (1374)	10.3 (262)	227 (103)

*Measurements represent the largest number possible for each model using standard efficiency motors.

© 2013 Pentair Ltd.

AURORA PVMX4 SERIES

DIMENSIONS AND SPECIFICATIONS
316 SS CONSTRUCTION
0.33 – 1.5 HP (.246 – 1.12 kW) PUMPS

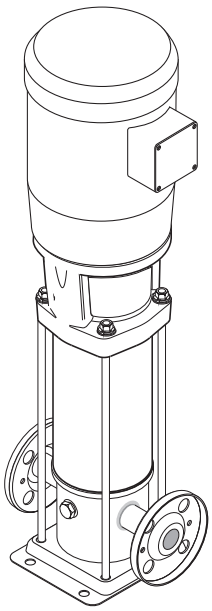

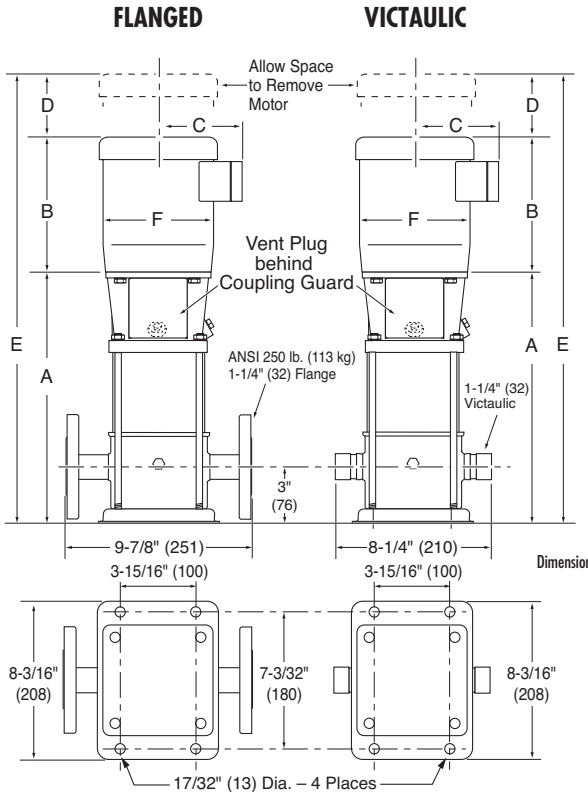

TECHNICAL INFORMATION	
MINIMUM PUMPING RATES	2.5 GPM (9.5 LPM)
FLOW RANGE	2.5 – 33 GPM (9.5 – 124.9 LPM)
MIN. SUCTION PIPE SIZES	1-1/4" (32 mm) Nominal Diameter, Schedule 40 Pipe
MAX. WORKING PRESSURE	360 PSI (25 Bar)
MAX. AMBIENT TEMP.	104° F (40° C)
LIQUID TEMP. RANGE	+5° F to +250° F (-15° C to 121° C)
MOTOR OPTIONS	TEFC or ODP
CONSTRUCTION MATERIALS	See Page 16

Dimensions in ( ) are in mm.

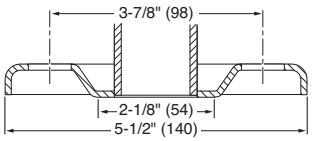

Model Number	HP (kW)	Motor S.F.	ph	Volts	Frame Size	Disc. Size in Inches (mm)	Suction Size in Inches (mm)	Sleeve in Inches (mm)	Dimensions in Inches (mm)* A	B	C	D	E	F	TEFC Wt. Lbs. (kg)
PVM(I/X)4-20/1D	0.33 (.246)	1.25	1	110/220	56CZ	1.25 (32)	1.25 (32)	1.57 (40)	11.7 (297)	9.3 (236)	4.5 (114)	2.0 (51)	23.0 (584)	6.0 (152)	50 (23)
PVM(I/X)4-20/1D	0.33 (.246)	1.25	3	190/380	56CZ	1.25 (32)	1.25 (32)	1.57 (40)	11.7 (297)	9.3 (236)	5.2 (132)	2.0 (51)	23.0 (584)	6.2 (157)	61 (28)
PVM(I/X)4-20D	0.5 (.373)	1.25	1	110/220	56CZ	1.25 (32)	1.25 (32)	1.57 (40)	11.7 (297)	9.3 (236)	4.5 (114)	2.0 (51)	23.0 (584)	6.0 (152)	60 (27)
PVM(I/X)4-20D	0.5 (.373)	1.25	3	190/380	56CZ	1.25 (32)	1.25 (32)	1.57 (40)	11.7 (297)	9.3 (236)	5.2 (132)	2.0 (51)	23.0 (584)	6.2 (157)	60 (27)
PVM(I/X)4-30D	0.75 (.559)	1.25	1	110/220	56CZ	1.25 (32)	1.25 (32)	2.64 (67)	12.8 (325)	10.1 (257)	5.3 (135)	2.0 (51)	24.9 (632)	7.2 (183)	67 (30)
PVM(I/X)4-30D	0.75 (.559)	1.25	3	190/380	56CZ	1.25 (32)	1.25 (32)	2.64 (67)	12.8 (325)	9.3 (236)	5.2 (132)	2.0 (51)	24.1 (612)	6.2 (157)	66 (30)
PVM(I/X)4-40D	1 (.746)	1.25	1	110/220	56CZ	1.25 (32)	1.25 (32)	3.70 (94)	13.9 (353)	10.1 (257)	5.7 (145)	2.0 (51)	26.0 (660)	7.2 (183)	78 (35)
PVM(I/X)4-40D	1 (.746)	1.25	3	190/380	56CZ	1.25 (32)	1.25 (32)	3.70 (94)	13.9 (353)	10.1 (257)	5.7 (145)	2.0 (51)	26.0 (660)	7.2 (183)	74 (34)
PVM(I/X)4-50D	1.5 (1.12)	1.25	1	110/220	56CZ	1.25 (32)	1.25 (32)	4.76 (121)	14.9 (378)	10.1 (257)	5.7 (145)	2.0 (51)	27.0 (686)	7.2 (183)	86 (39)
PVM(I/X)4-50D	1.5 (1.12)	1.25	3	190/380	56CZ	1.25 (32)	1.25 (32)	4.76 (121)	14.9 (378)	10.1 (257)	5.7 (145)	2.0 (51)	27.0 (686)	7.2 (183)	82 (37)

*Measurements represent the largest number possible for each model using standard efficiency motors.

© 2013 Pentair Ltd.

AURORA PVMX4 SERIES

DIMENSIONS AND SPECIFICATIONS

316 SS CONSTRUCTION

2 – 7.5 HP (1.49 – 5.59 kW) PUMPS

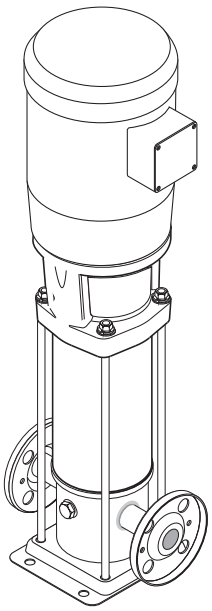

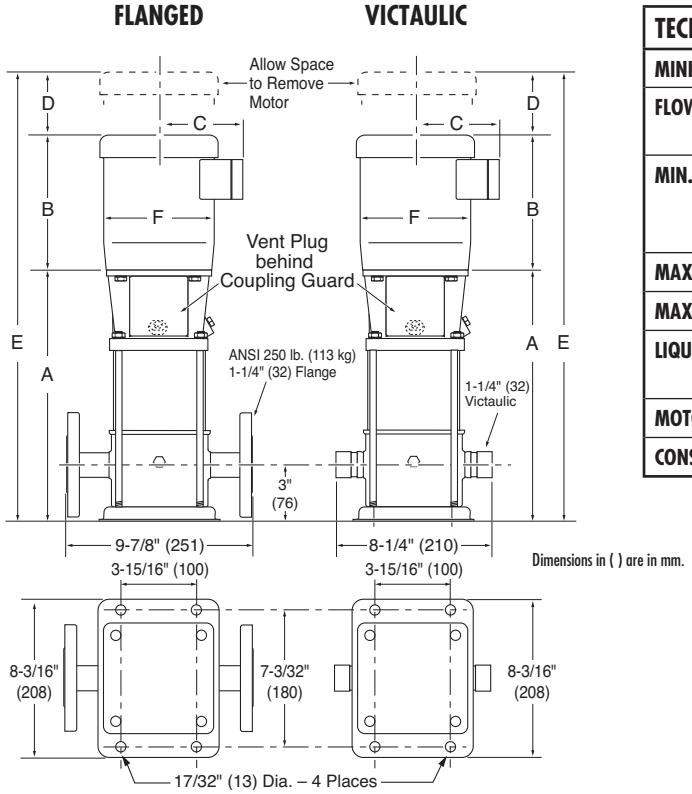

Dimensions in ( ) are in mm.

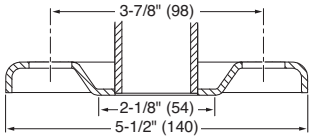

TECHNICAL INFORMATION	
MINIMUM PUMPING RATES	2.5 GPM (9.5 LPM)
FLOW RANGE	2.5 – 33 GPM (9.5 – 124.9 LPM)
MIN. SUCTION PIPE SIZES	1-1/4" (32 mm) Nominal Diameter, Schedule 40 Pipe
MAX. WORKING PRESSURE	360 PSI (25 Bar)
MAX. AMBIENT TEMP.	104° F (40° C)
LIQUID TEMP. RANGE	+5° F to +250° F (-15° C to 121° C)
MOTOR OPTIONS	TEFC or ODP
CONSTRUCTION MATERIALS	See Page 16

Model Number	HP (kW)	Motor S.F.	ph	Volts	Frame Size	Disc. Size in Inches (mm)	Suction Size in Inches (mm)	Sleeve in Inches (mm)	Dimensions in Inches (mm)*						TEFC Wt. Lbs. (kg)
									A	B	C	D	E	F	
PVM(I/X)4-60D	2 (1.49)	1.4	1	110/220	182TCZ	1.25 (32)	1.25 (32)	5.83 (148)	16.0 (406)	13.9 (353)	7.9 (201)	2.6 (66)	32.5 (826)	10.0 (254)	127 (57)
PVM(I/X)4-60D	2 (1.49)	1.4	3	190/380	182TCZ	1.25 (32)	1.25 (32)	5.83 (148)	16.0 (406)	12.6 (320)	6.9 (175)	2.6 (66)	31.2 (793)	8.6 (218)	107 (48)
PVM(I/X)4-80/7D	2 (1.49)	1.4	1	110/220	182TCZ	1.25 (32)	1.25 (32)	7.95 (202)	18.1 (460)	13.9 (353)	7.9 (201)	2.6 (66)	34.6 (879)	10.0 (254)	129 (59)
PVM(I/X)4-80/7D	2 (1.49)	1.4	3	190/380	182TCZ	1.25 (32)	1.25 (32)	7.95 (202)	18.1 (460)	12.6 (320)	6.9 (175)	2.6 (66)	33.3 (846)	8.6 (218)	109 (49)
PVM(I/X)4-80D	2 (1.49)	1.4	1	110/220	182TCZ	1.25 (32)	1.25 (32)	7.95 (202)	18.1 (460)	13.9 (353)	7.9 (201)	2.6 (66)	34.6 (879)	10.0 (254)	129 (59)
PVM(I/X)4-80D	2 (1.49)	1.4	3	190/380	182TCZ	1.25 (32)	1.25 (32)	7.95 (202)	18.1 (460)	12.6 (320)	6.9 (175)	2.6 (66)	33.3 (846)	8.6 (218)	109 (49)
PVM(I/X)4-90D	3 (2.24)	1.4	1	110/220	213TCZ	1.25 (32)	1.25 (32)	9.02 (229)	19.2 (487)	13.9 (353)	7.9 (201)	2.6 (66)	35.7 (907)	10.0 (254)	151 (69)
PVM(I/X)4-90D	3 (2.24)	1.4	3	190/380	184TCZ	1.25 (32)	1.25 (32)	9.02 (229)	19.2 (487)	12.6 (320)	6.9 (175)	2.6 (66)	34.4 (874)	8.6 (218)	125 (57)
PVM(I/X)4-100D	3 (2.24)	1.4	1	110/220	213TCZ	1.25 (32)	1.25 (32)	10.08 (256)	20.2 (514)	13.9 (353)	7.9 (201)	2.6 (66)	36.7 (932)	10.0 (254)	153 (69)
PVM(I/X)4-100D	3 (2.24)	1.4	3	190/380	184TCZ	1.25 (32)	1.25 (32)	10.08 (256)	20.2 (514)	12.6 (320)	6.9 (175)	2.6 (66)	35.4 (899)	8.6 (218)	127 (57)
PVM(I/X)4-110D	3 (2.24)	1.4	1	110/220	213TCZ	1.25 (32)	1.25 (32)	11.14 (283)	21.3 (541)	13.9 (353)	7.9 (201)	2.6 (66)	37.8 (960)	10.0 (254)	154 (70)
PVM(I/X)4-110D	3 (2.24)	1.4	3	190/380	184TCZ	1.25 (32)	1.25 (32)	11.14 (283)	21.3 (541)	12.6 (320)	6.9 (175)	2.6 (66)	36.5 (927)	8.6 (218)	128 (58)
PVM(I/X)4-120D	3 (2.24)	1.4	1	110/220	213TCZ	1.25 (32)	1.25 (32)	12.20 (310)	22.4 (568)	13.9 (353)	7.9 (201)	2.6 (66)	38.9 (988)	10.0 (254)	155 (70)
PVM(I/X)4-120D	3 (2.24)	1.4	3	190/380	184TCZ	1.25 (32)	1.25 (32)	12.20 (310)	22.4 (568)	12.6 (320)	6.9 (175)	2.6 (66)	37.6 (955)	8.6 (218)	129 (59)
PVM(I/X)4-130D	3 (2.24)	1.4	1	110/220	213TCZ	1.25 (32)	1.25 (32)	13.27 (337)	23.4 (595)	13.9 (353)	7.9 (201)	2.6 (66)	39.9 (1013)	10.0 (254)	156 (71)
PVM(I/X)4-130D	3 (2.24)	1.4	3	190/380	184TCZ	1.25 (32)	1.25 (32)	13.27 (337)	23.4 (595)	12.6 (320)	6.9 (175)	2.6 (66)	38.6 (980)	8.6 (218)	130 (59)
PVM(I/X)4-140D	3 (2.24)	1.4	1	110/220	213TCZ	1.25 (32)	1.25 (32)	14.33 (364)	24.5 (622)	13.9 (353)	7.9 (201)	2.6 (66)	41.0 (1041)	10.0 (254)	158 (72)
PVM(I/X)4-140D	3 (2.24)	1.4	3	190/380	184TCZ	1.25 (32)	1.25 (32)	14.33 (364)	24.5 (622)	12.6 (320)	6.9 (175)	2.6 (66)	39.7 (1008)	8.6 (218)	132 (60)
PVM(I/X)4-150D	5 (3.73)	1.4	1	110/220	213TCZ	1.25 (32)	1.25 (32)	15.39 (391)	25.5 (649)	13.9 (353)	7.9 (201)	2.6 (66)	42.0 (1067)	10.0 (254)	173 (78)
PVM(I/X)4-150D	5 (3.73)	1.4	3	190/380	213TCZ	1.25 (32)	1.25 (32)	15.39 (391)	25.5 (649)	13.9 (353)	8.1 (206)	2.6 (66)	42.0 (1067)	10.3 (262)	177 (80)
PVM(I/X)4-160D	5 (3.73)	1.4	1	110/220	213TCZ	1.25 (32)	1.25 (32)	16.46 (418)	26.6 (676)	13.9 (353)	7.9 (201)	2.6 (66)	43.1 (1095)	10.0 (254)	174 (79)
PVM(I/X)4-160D	5 (3.73)	1.4	3	190/380	213TCZ	1.25 (32)	1.25 (32)	16.46 (418)	26.6 (676)	13.9 (353)	8.1 (206)	2.6 (66)	43.1 (1095)	10.3 (262)	178 (81)
PVM(I/X)4-190D	5 (3.73)	1.4	1	110/220	213TCZ	1.25 (32)	1.25 (32)	19.65 (499)	29.8 (757)	13.9 (353)	7.9 (201)	2.6 (66)	46.3 (1176)	10.0 (254)	178 (81)
PVM(I/X)4-190D	5 (3.73)	1.4	3	190/380	213TCZ	1.25 (32)	1.25 (32)	19.65 (499)	29.8 (757)	13.9 (353)	8.1 (206)	2.6 (66)	46.3 (1176)	10.3 (262)	182 (83)
PVM(I/X)4-220D	5 (3.73)	1.4	1	110/220	213TCZ	1.25 (32)	1.25 (32)	22.83 (580)	33.0 (838)	13.9 (353)	7.9 (201)	2.6 (66)	49.5 (1257)	10.0 (254)	182 (82)
PVM(I/X)4-220D	5 (3.73)	1.4	3	190/380	213TCZ	1.25 (32)	1.25 (32)	22.83 (580)	33.0 (838)	13.9 (353)	8.1 (206)	2.6 (66)	49.5 (1257)	10.3 (262)	186 (84)
PVM(I/X)4-240D	7.5 (5.59)	1.15	1	110/220	213TCZ	1.25 (32)	1.25 (32)	24.96 (634)	35.1 (892)	13.9 (353)	7.9 (201)	3.1 (79)	52.1 (1323)	10.0 (254)	214 (97)
PVM(I/X)4-240D	7.5 (5.59)	1.15	3	190/380	213TCZ	1.25 (32)	1.25 (32)	24.96 (634)	35.1 (892)	13.9 (353)	8.1 (206)	3.1 (79)	52.1 (1323)	10.3 (262)	211 (96)
PVM(I/X)4-260D	7.5 (5.59)	1.15	1	110/220	213TCZ	1.25 (32)	1.25 (32)	27.09 (688)	37.2 (946)	13.9 (353)	7.9 (201)	3.1 (79)	54.2 (1377)	10.0 (254)	217 (98)
PVM(I/X)4-260D	7.5 (5.59)	1.15	3	190/380	213TCZ	1.25 (32)	1.25 (32)	27.09 (688)	37.2 (946)	13.9 (353)	8.1 (206)	3.1 (79)	54.2 (1377)	10.3 (262)	214 (97)

*Measurements represent the largest number possible for each model using standard efficiency motors.

© 2013 Pentair Ltd.

AURORA PVM8 SERIES

DIMENSIONS AND SPECIFICATIONS
CAST IRON CONSTRUCTION
0.5 – 5 HP (.373 – 3.73 kW) PUMPS

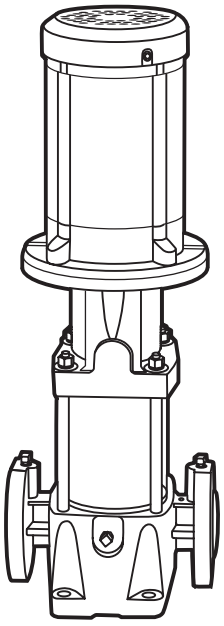

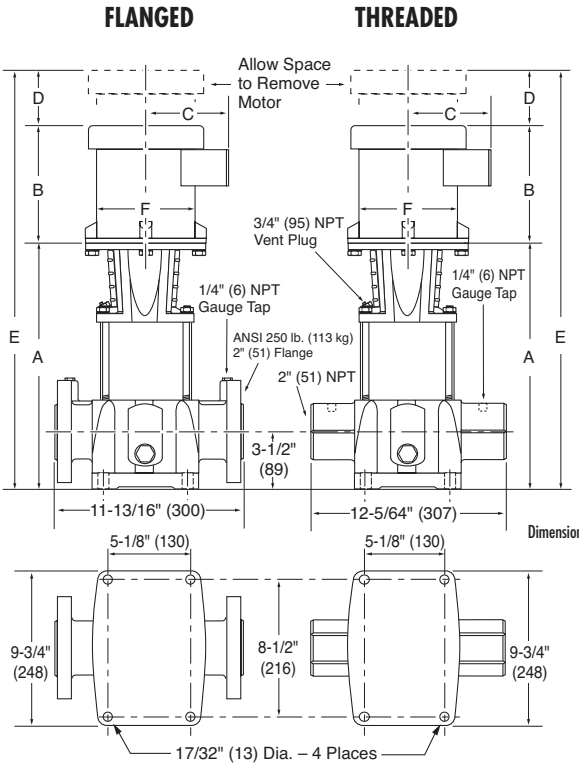

TECHNICAL INFORMATION	
MINIMUM PUMPING RATES	4.4 GPM (16.7 LPM)
FLOW RANGE	4.4 – 54 GPM (16.7 – 204 LPM)
MIN. SUCTION PIPE SIZES	2" (51 mm) Nominal Diameter, Schedule 40 Pipe
MAX. WORKING PRESSURE	360 PSI (25 Bar)
MAX. AMBIENT TEMP.	104° F (40° C)
LIQUID TEMP. RANGE	+5° F to +250° F (-15° C to 121° C)
MOTOR OPTIONS	TEFC or ODP
CONSTRUCTION MATERIALS	See Page 29

Dimensions in ( ) are in mm.

2" (51) ANSI. 250 lb. (113 kg) 8-Bolt Flange

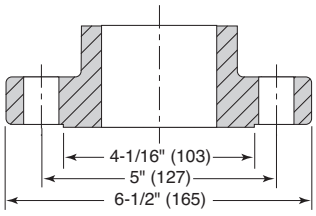

Model Number	HP (kW)	Motor S.F.	ph	Volts	Frame Size	Disc. Size in Inches (mm)	Suction Size in Inches (mm)	Sleeve in Inches (mm)	Dimensions in Inches (mm)*						TEFC Wt. Lbs. (kg)
									A	B	C	D	E	F	
PVM8-20/1D	0.5 (.373)	1.25	1	110/220	56CZ	2 (51)	2 (51)	3.35 (85)	14.1 (358)	9.3 (236)	4.5 (114)	2.0 (51)	25.4 (645)	6.0 (152)	93 (42)
PVM8-20/1D	0.5 (.373)	1.25	3	190/380	56CZ	2 (51)	2 (51)	3.35 (85)	14.1 (358)	9.3 (236)	4.5 (114)	2.0 (51)	25.4 (645)	6.0 (152)	93 (42)
PVM8-20D	1 (.746)	1.25	1	110/220	56CZ	2 (51)	2 (51)	3.35 (85)	15.2 (386)	10.1 (257)	5.7 (145)	2.0 (51)	27.3 (693)	7.2 (183)	111 (50)
PVM8-20D	1 (.746)	1.25	3	190/380	56CZ	2 (51)	2 (51)	3.35 (85)	15.2 (386)	10.1 (257)	5.7 (145)	2.0 (51)	27.3 (693)	7.2 (183)	107 (49)
PVM8-30D	2 (1.49)	1.4	1	110/220	182TCZ	2 (51)	2 (51)	4.53 (115)	16.4 (417)	13.9 (353)	7.9 (201)	2.6 (66)	32.9 (836)	10.0 (254)	169 (77)
PVM8-30D	2 (1.49)	1.4	3	190/380	182TCZ	2 (51)	2 (51)	4.53 (115)	16.4 (417)	12.6 (320)	6.9 (175)	2.6 (66)	31.6 (803)	8.6 (218)	149 (68)
PVM8-40D	2 (1.49)	1.4	1	110/220	182TCZ	2 (51)	2 (51)	5.71 (145)	17.6 (447)	13.9 (353)	7.9 (201)	2.6 (66)	34.1 (866)	10.0 (254)	171 (77)
PVM8-40D	2 (1.49)	1.4	3	190/380	182TCZ	2 (51)	2 (51)	5.71 (145)	17.6 (447)	12.6 (320)	6.9 (175)	2.6 (66)	32.8 (833)	8.6 (218)	151 (68)
PVM8-50D	3 (2.24)	1.4	1	110/220	213TCZ	2 (51)	2 (51)	6.89 (175)	18.8 (478)	13.9 (353)	7.9 (201)	2.6 (66)	35.3 (897)	10.0 (254)	193 (88)
PVM8-50D	3 (2.24)	1.4	3	190/380	184TCZ	2 (51)	2 (51)	6.89 (175)	18.8 (478)	12.6 (320)	6.9 (175)	2.6 (66)	34.0 (864)	8.6 (218)	167 (76)
PVM8-60D	3 (2.24)	1.4	1	110/220	213TCZ	2 (51)	2 (51)	8.07 (205)	20.0 (508)	13.9 (353)	7.9 (201)	2.6 (66)	36.5 (927)	10.0 (254)	195 (88)
PVM8-60D	3 (2.24)	1.4	3	190/380	184TCZ	2 (51)	2 (51)	8.07 (205)	20.0 (508)	12.6 (320)	6.9 (175)	2.6 (66)	35.2 (894)	8.6 (218)	169 (77)
PVM8-70D	5 (3.73)	1.4	1	110/220	213TCZ	2 (51)	2 (51)	9.25 (235)	21.1 (536)	13.9 (353)	7.9 (201)	2.6 (66)	37.6 (955)	10.0 (254)	210 (95)
PVM8-70D	5 (3.73)	1.4	3	190/380	213TCZ	2 (51)	2 (51)	9.25 (235)	21.1 (536)	13.9 (353)	8.1 (206)	2.6 (66)	37.6 (955)	10.3 (262)	214 (97)

*Measurements represent the largest number possible for each model using standard efficiency motors.

© 2013 Pentair Ltd.

AURORA PVM8 SERIES

DIMENSIONS AND SPECIFICATIONS
CAST IRON CONSTRUCTION
5 – 10 HP (3.73 – 7.46 kW) PUMPS

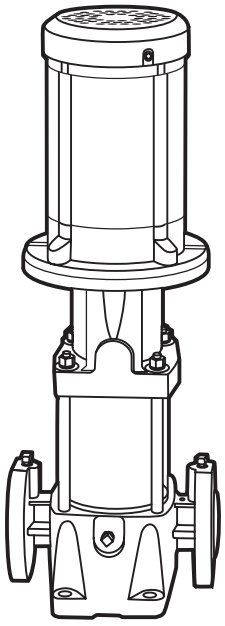

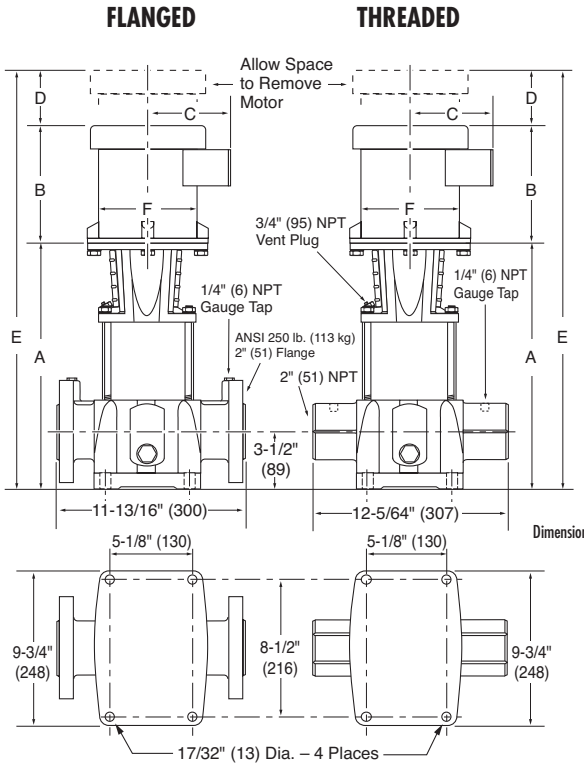

TECHNICAL INFORMATION	
MINIMUM PUMPING RATES	4.4 GPM (16.7 LPM)
FLOW RANGE	4.4 – 54 GPM (16.7 – 204 LPM)
MIN. SUCTION PIPE SIZES	2" (51 mm) Nominal Diameter, Schedule 40 Pipe
MAX. WORKING PRESSURE	360 PSI (25 Bar)
MAX. AMBIENT TEMP.	104° F (40° C)
LIQUID TEMP. RANGE	+5° F to +250° F (-15° C to 121° C)
MOTOR OPTIONS	TEFC or ODP
CONSTRUCTION MATERIALS	See Page 29

2" (51) ANSI. 250 lb. (113 kg) 8-Bolt Flange

Dimensions in ( ) are in mm.

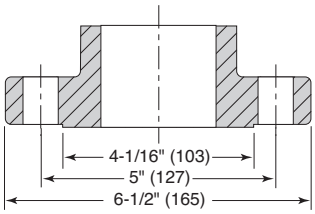

Model Number	HP (kW)	Motor S.F.	ph	Volts	Frame Size	Disc. Size in Inches (mm)	Suction Size in Inches (mm)	Sleeve in Inches (mm)	Dimensions in Inches (mm)* A	B	C	D	E	F	TEFC Wt. Lbs. (kg)
PVM8-80D	5 (3.73)	1.4	1	110/220	213TCZ	2 (51)	2 (51)	10.43 (265)	22.3 (566)	13.9 (353)	7.9 (201)	2.6 (66)	38.8 (986)	10.0 (254)	212 (96)
PVM8-80D	5 (3.73)	1.4	3	190/380	213TCZ	2 (51)	2 (51)	10.43 (265)	22.3 (566)	13.9 (353)	8.1 (206)	2.6 (66)	38.8 (986)	10.3 (262)	216 (98)
PVM8-90D	5 (3.73)	1.4	1	110/220	213TCZ	2 (51)	2 (51)	11.61 (295)	23.5 (597)	13.9 (353)	7.9 (201)	2.6 (66)	40.0 (1016)	10.0 (254)	213 (97)
PVM8-90D	5 (3.73)	1.4	3	190/380	213TCZ	2 (51)	2 (51)	11.61 (295)	23.5 (597)	13.9 (353)	8.1 (206)	2.6 (66)	40.0 (1016)	10.3 (262)	217 (99)
PVM8-100D	5 (3.73)	1.4	1	110/220	213TCZ	2 (51)	2 (51)	12.80 (325)	24.7 (627)	13.9 (353)	7.9 (201)	2.6 (66)	41.2 (1046)	10.0 (254)	215 (97)
PVM8-100D	5 (3.73)	1.4	3	190/380	213TCZ	2 (51)	2 (51)	12.80 (325)	24.7 (627)	13.9 (353)	8.1 (206)	2.6 (66)	41.2 (1046)	10.3 (262)	219 (99)
PVM8-110D	7.5 (5.59)	1.15	1	110/220	215TCZ	2 (51)	2 (51)	13.98 (355)	25.9 (658)	13.9 (353)	7.9 (201)	3.1 (79)	42.9 (1090)	10.0 (254)	248 (113)
PVM8-110D	7.5 (5.59)	1.15	3	190/380	215TCZ	2 (51)	2 (51)	13.98 (355)	25.9 (658)	14.2 (361)	8.1 (206)	3.1 (79)	43.2 (1097)	10.3 (262)	245 (111)
PVM8-120D	7.5 (5.59)	1.15	1	110/220	215TCZ	2 (51)	2 (51)	15.16 (385)	27.0 (686)	13.9 (353)	7.9 (201)	3.1 (79)	44 (1118)	10.0 (254)	250 (113)
PVM8-120D	7.5 (5.59)	1.15	3	190/380	215TCZ	2 (51)	2 (51)	15.16 (385)	27.0 (686)	14.2 (361)	8.1 (206)	3.1 (79)	44.3 (1125)	10.3 (262)	247 (112)
PVM8-130D	7.5 (5.59)	1.15	1	110/220	215TCZ	2 (51)	2 (51)	16.34 (415)	28.2 (716)	13.9 (353)	7.9 (201)	3.1 (79)	45.2 (1148)	10.0 (254)	251 (114)
PVM8-130D	7.5 (5.59)	1.15	3	190/380	215TCZ	2 (51)	2 (51)	16.34 (415)	28.2 (716)	14.2 (361)	8.1 (206)	3.1 (79)	45.5 (1156)	10.3 (262)	248 (113)
PVM8-140D	7.5 (5.59)	1.15	1	110/220	215TCZ	2 (51)	2 (51)	17.52 (445)	29.4 (747)	13.9 (353)	7.9 (201)	3.1 (79)	46.4 (1179)	10.0 (254)	253 (115)
PVM8-140D	7.5 (5.59)	1.15	3	190/380	215TCZ	2 (51)	2 (51)	17.52 (445)	29.4 (747)	14.2 (361)	8.1 (206)	3.1 (79)	46.7 (1186)	10.3 (262)	250 (113)
PVM8-150D	10 (7.46)	1.15	3	190/380	215TCZ	2 (51)	2 (51)	18.70 (475)	31.1 (790)	20 (508)	9.5 (241)	4.0 (102)	56.3 (1430)	12.9 (328)	342 (155)
PVM8-160D	10 (7.46)	1.15	3	190/380	215TCZ	2 (51)	2 (51)	19.88 (505)	32.3 (820)	20 (508)	9.5 (241)	4.0 (102)	56.3 (1430)	12.9 (328)	342 (155)
PVM8-180D	10 (7.46)	1.15	3	190/380	215TCZ	2 (51)	2 (51)	22.24 (565)	34.6 (879)	20 (508)	9.5 (241)	4.0 (102)	58.6 (1488)	12.9 (328)	345 (156)
PVM8-200D	10 (7.46)	1.15	3	190/380	215TCZ	2 (51)	2 (51)	24.61 (625)	37.0 (940)	20 (508)	9.5 (241)	4.0 (102)	61.0 (1549)	12.9 (328)	348 (158)

*Measurements represent the largest number possible for each model using standard efficiency motors.

© 2013 Pentair Ltd.

AURORA PVMX8 SERIES

DIMENSIONS AND SPECIFICATIONS
316 SS CONSTRUCTION
0.5 – 5 HP (.373 – 3.73 kW) PUMPS

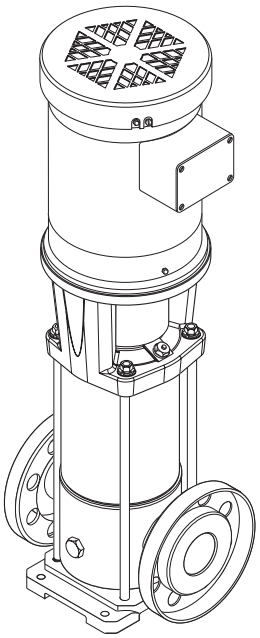

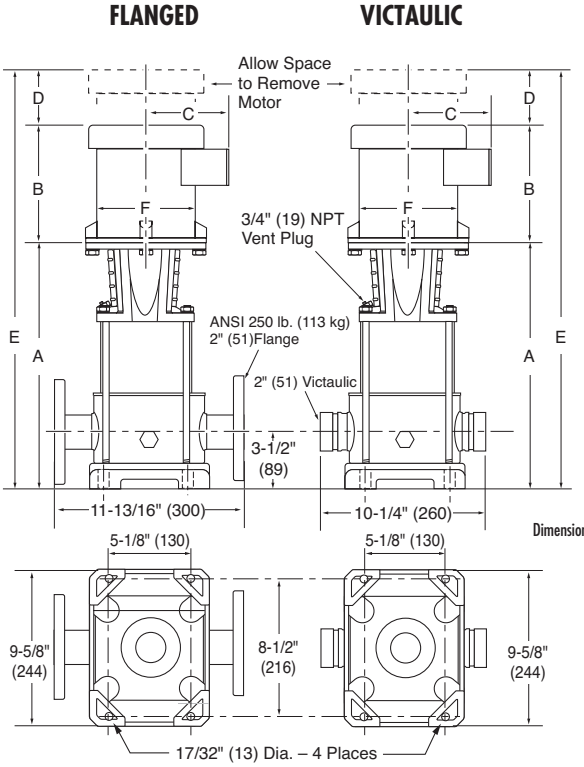

TECHNICAL INFORMATION	
MINIMUM PUMPING RATES	4.4 GPM (16.7 LPM)
FLOW RANGE	4.4 – 54 GPM (16.7 – 204 LPM)
MIN. SUCTION PIPE SIZES	2" (51 mm) Nominal Diameter, Schedule 40 Pipe
MAX. WORKING PRESSURE	360 PSI (25 Bar)
MAX. AMBIENT TEMP.	104° F (40° C)
LIQUID TEMP. RANGE	+5° F to +250° F (-15° C to 121° C)
MOTOR OPTIONS	TEFC or ODP
CONSTRUCTION MATERIALS	See Page 29

Dimensions in ( ) are in mm.

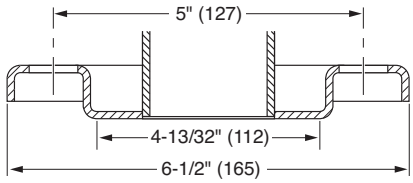

Model Number	HP (kW)	Motor S.F.	ph	Volts	Frame Size	Disc. Size in Inches (mm)	Suction Size in Inches (mm)	Sleeve in Inches (mm)	Dimensions in Inches (mm)*						TEFC Wt. Lbs. (kg)
									A	B	C	D	E	F	
PVM(I/X)8-20/1D	0.5 (.373)	1.25	1	110/220	56CZ	2 (51)	2 (51)	3.35 (85)	14.1 (358)	9.3 (236)	4.5 (114)	2.0 (51)	25.4 (645)	6.0 (152)	71 (32)
PVM(I/X)8-20/1D	0.5 (.373)	1.25	3	190/380	56CZ	2 (51)	2 (51)	3.35 (85)	14.1 (358)	9.3 (236)	4.5 (114)	2.0 (51)	25.4 (645)	6.0 (152)	71 (32)
PVM(I/X)8-20D	1 (.746)	1.25	1	110/220	56CZ	2 (51)	2 (51)	3.35 (85)	15.2 (386)	10.1 (257)	5.7 (145)	2.0 (51)	27.3 (693)	7.2 (183)	88 (40)
PVM(I/X)8-20D	1 (.746)	1.25	3	190/380	56CZ	2 (51)	2 (51)	3.35 (85)	15.2 (386)	10.1 (257)	5.7 (145)	2.0 (51)	27.3 (693)	7.2 (183)	84 (38)
PVM(I/X)8-30D	2 (1.49)	1.4	1	110/220	182TCZ	2 (51)	2 (51)	4.53 (115)	16.4 (417)	13.9 (353)	7.9 (201)	2.6 (66)	32.9 (836)	10.0 (254)	147 (67)
PVM(I/X)8-30D	2 (1.49)	1.4	3	190/380	182TCZ	2 (51)	2 (51)	4.53 (115)	16.4 (417)	12.6 (320)	6.9 (175)	2.6 (66)	31.6 (803)	8.6 (218)	127 (58)
PVM(I/X)8-40D	2 (1.49)	1.4	1	110/220	182TCZ	2 (51)	2 (51)	5.71 (145)	17.6 (447)	13.9 (353)	7.9 (201)	2.6 (66)	34.1 (866)	10.0 (254)	148 (67)
PVM(I/X)8-40D	2 (1.49)	1.4	3	190/380	182TCZ	2 (51)	2 (51)	5.71 (145)	17.6 (447)	12.6 (320)	6.9 (175)	2.6 (66)	32.8 (833)	8.6 (218)	128 (58)
PVM(I/X)8-50D	3 (2.24)	1.4	1	110/220	213TCZ	2 (51)	2 (51)	6.89 (175)	18.8 (478)	13.9 (353)	7.9 (201)	2.6 (66)	35.3 (897)	10.0 (254)	171 (77)
PVM(I/X)8-50D	3 (2.24)	1.4	3	190/380	184TCZ	2 (51)	2 (51)	6.89 (175)	18.8 (478)	12.6 (320)	6.9 (175)	2.6 (66)	34.0 (864)	8.6 (218)	145 (66)
PVM(I/X)8-60D	3 (2.24)	1.4	1	110/220	213TCZ	2 (51)	2 (51)	8.07 (205)	20.0 (508)	13.9 (353)	7.9 (201)	2.6 (66)	36.5 (927)	10.0 (254)	172 (78)
PVM(I/X)8-60D	3 (2.24)	1.4	3	190/380	184TCZ	2 (51)	2 (51)	8.07 (205)	20.0 (508)	12.6 (320)	6.9 (175)	2.6 (66)	35.2 (894)	8.6 (218)	146 (66)
PVM(I/X)8-70D	5 (3.73)	1.4	1	110/220	213TCZ	2 (51)	2 (51)	9.25 (235)	21.1 (536)	13.9 (353)	7.9 (201)	2.6 (66)	37.6 (955)	10.0 (254)	188 (85)
PVM(I/X)8-70D	5 (3.73)	1.4	3	190/380	213TCZ	2 (51)	2 (51)	9.25 (235)	21.1 (536)	13.9 (353)	8.1 (206)	2.6 (66)	37.6 (955)	10.3 (262)	192 (87)

*Measurements represent the largest number possible for each model using standard efficiency motors.

© 2013 Pentair Ltd.

AURORA PVMX8 SERIES

DIMENSIONS AND SPECIFICATIONS

316 SS CONSTRUCTION

5 – 10 HP (3.73 – 7.46 kW) PUMPS

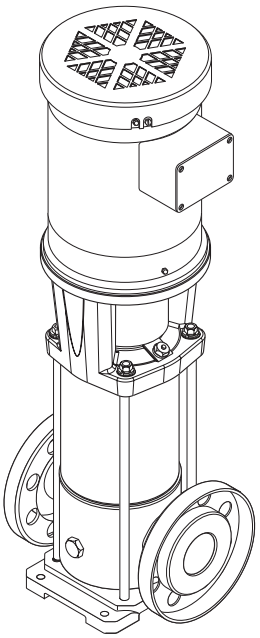

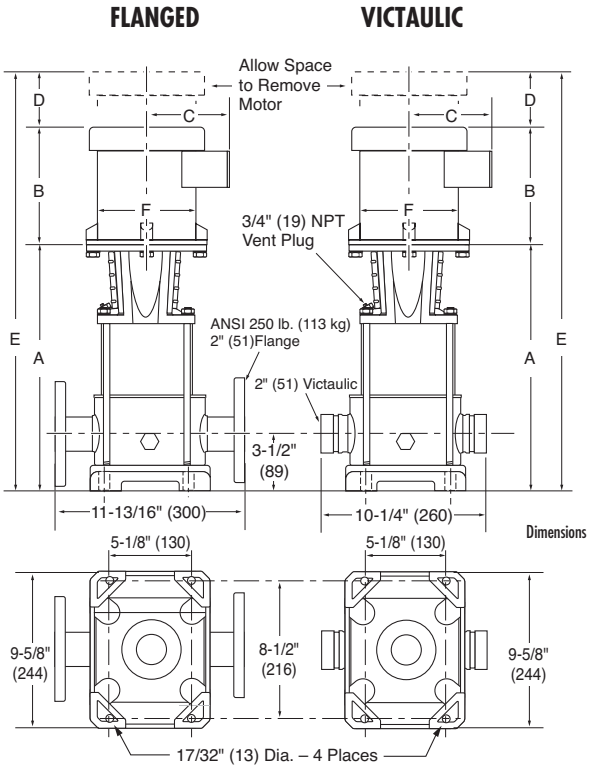

TECHNICAL INFORMATION	
MINIMUM PUMPING RATES	4.4 GPM (16.7 LPM)
FLOW RANGE	4.4 – 54 GPM (16.7 – 204 LPM)
MIN. SUCTION PIPE SIZES	2" (51 mm) Nominal Diameter, Schedule 40 Pipe
MAX. WORKING PRESSURE	360 PSI (25 Bar)
MAX. AMBIENT TEMP.	104° F (40° C)
LIQUID TEMP. RANGE	+5° F to +250° F (-15° C to 121° C)
MOTOR OPTIONS	TEFC or ODP
CONSTRUCTION MATERIALS	See Page 29

Dimensions in ( ) are in mm.

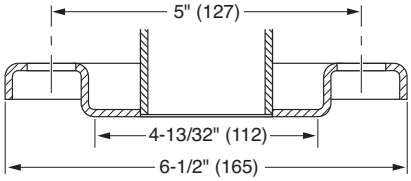

Model Number	HP (kW)	Motor S.F.	ph	Volts	Frame Size	Disc. Size in Inches (mm)	Suction Size in Inches (mm)	Sleeve in Inches (mm)	Dimensions in Inches (mm)* A	B	C	D	E	F	TEFC Wt. Lbs. (kg)
PVM(I/X)8-80D	5 (3.73)	1.4	1	110/220	213TCZ	2 (51)	2 (51)	10.43 (265)	22.3 (566)	13.9 (353)	7.9 (201)	2.6 (66)	38.8 (986)	10.0 (254)	189 (86)
PVM(I/X)8-80D	5 (3.73)	1.4	3	190/380	213TCZ	2 (51)	2 (51)	10.43 (265)	22.3 (566)	13.9 (353)	8.1 (206)	2.6 (66)	38.8 (986)	10.3 (262)	193 (88)
PVM(I/X)8-90D	5 (3.73)	1.4	1	110/220	213TCZ	2 (51)	2 (51)	11.61 (295)	23.5 (597)	13.9 (353)	7.9 (201)	2.6 (66)	40.0 (1016)	10.0 (254)	191 (87)
PVM(I/X)8-90D	5 (3.73)	1.4	3	190/380	213TCZ	2 (51)	2 (51)	11.61 (295)	23.5 (597)	13.9 (353)	8.1 (206)	2.6 (66)	40.0 (1016)	10.3 (262)	195 (88)
PVM(I/X)8-100D	5 (3.73)	1.4	1	110/220	213TCZ	2 (51)	2 (51)	12.80 (325)	24.7 (627)	13.9 (353)	7.9 (201)	2.6 (66)	41.2 (1046)	10.0 (254)	192 (87)
PVM(I/X)8-100D	5 (3.73)	1.4	3	190/380	213TCZ	2 (51)	2 (51)	12.80 (325)	24.7 (627)	13.9 (353)	8.1 (206)	2.6 (66)	41.2 (1046)	10.3 (262)	196 (89)
PVM(I/X)8-110D	7.5 (5.59)	1.15	1	110/220	215TCZ	2 (51)	2 (51)	13.98 (355)	25.9 (658)	13.9 (353)	7.9 (201)	3.1 (79)	42.9 (1090)	10.0 (254)	226 (102)
PVM(I/X)8-110D	7.5 (5.59)	1.15	3	190/380	215TCZ	2 (51)	2 (51)	13.98 (355)	25.9 (658)	14.2 (361)	8.1 (206)	3.1 (79)	43.2 (1097)	10.3 (262)	223 (101)
PVM(I/X)8-120D	7.5 (5.59)	1.15	1	110/220	215TCZ	2 (51)	2 (51)	15.16 (385)	27.0 (686)	13.9 (353)	7.9 (201)	3.1 (79)	44.0 (1118)	10.0 (254)	227 (103)
PVM(I/X)8-120D	7.5 (5.59)	1.15	3	190/380	215TCZ	2 (51)	2 (51)	15.16 (385)	27.0 (686)	14.2 (361)	8.1 (206)	3.1 (79)	44.3 (1125)	10.3 (262)	224 (102)
PVM(I/X)8-130D	7.5 (5.59)	1.15	1	110/220	215TCZ	2 (51)	2 (51)	16.34 (415)	28.2 (716)	13.9 (353)	7.9 (201)	3.1 (79)	45.2 (1148)	10.0 (254)	229 (104)
PVM(I/X)8-130D	7.5 (5.59)	1.15	3	190/380	215TCZ	2 (51)	2 (51)	16.34 (415)	28.2 (716)	14.2 (361)	8.1 (206)	3.1 (79)	45.5 (1156)	10.3 (262)	226 (102)
PVM(I/X)8-140D	7.5 (5.59)	1.15	1	110/220	215TCZ	2 (51)	2 (51)	17.52 (445)	29.4 (747)	13.9 (353)	7.9 (201)	3.1 (79)	46.4 (1179)	10.0 (254)	230 (104)
PVM(I/X)8-140D	7.5 (5.59)	1.15	3	190/380	215TCZ	2 (51)	2 (51)	17.52 (445)	29.4 (747)	14.2 (361)	8.1 (206)	3.1 (79)	46.7 (1186)	10.3 (262)	227 (103)
PVM(I/X)8-150D	10 (7.46)	1.15	3	190/380	215TCZ	2 (51)	2 (51)	18.70 (475)	31.1 (790)	20.0 (508)	9.5 (241)	4.0 (102)	55.1 (1400)	12.9 (328)	318 (144)
PVM(I/X)8-160D	10 (7.46)	1.15	3	190/380	215TCZ	2 (51)	2 (51)	19.88 (505)	32.3 (820)	20.0 (508)	9.5 (241)	4.0 (102)	56.3 (1430)	12.9 (328)	319 (145)
PVM(I/X)8-180D	10 (7.46)	1.15	3	190/380	215TCZ	2 (51)	2 (51)	22.24 (565)	34.6 (879)	20.0 (508)	9.5 (241)	4.0 (102)	58.6 (1488)	12.9 (328)	322 (146)
PVM(I/X)8-200D	10 (7.46)	1.15	3	190/380	215TCZ	2 (51)	2 (51)	24.61 (625)	37.0 (940)	20.0 (508)	9.5 (241)	4.0 (102)	61.0 (1549)	12.9 (328)	325 (148)

*Measurements represent the largest number possible for each model using standard efficiency motors.

© 2013 Pentair Ltd.

AURORA PVM16 SERIES

DIMENSIONS AND SPECIFICATIONS
CAST IRON CONSTRUCTION
3 – 20 HP (2.24 – 14.91 kW) PUMPS

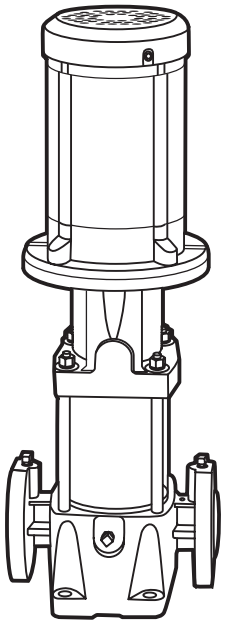

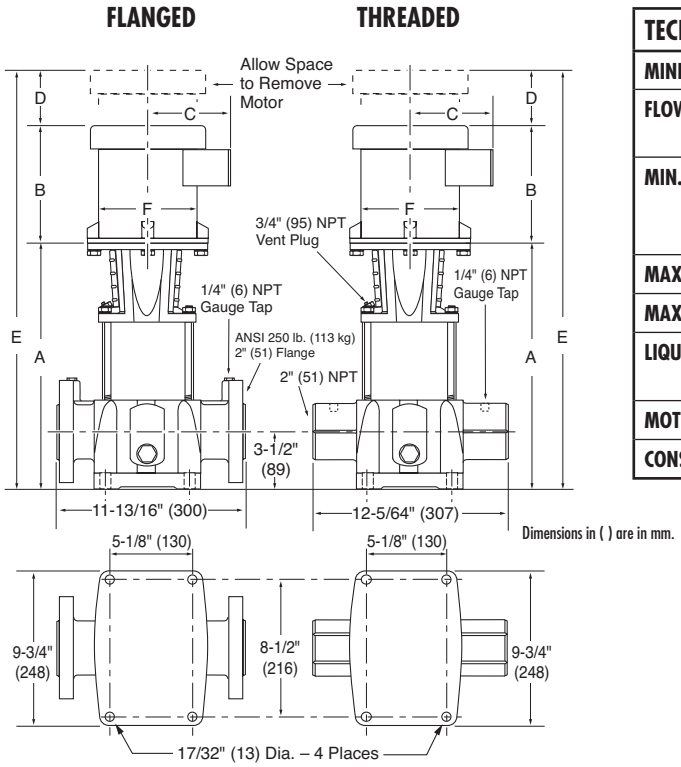

Dimensions in ( ) are in mm.

TECHNICAL INFORMATION	
MINIMUM PUMPING RATES	7.08 GPM (26.8 LPM)
FLOW RANGE	7.08 – 87.5 GPM (26.8 – 331.2 LPM)
MIN. SUCTION PIPE SIZES	2" (51 mm) Nominal Diameter, Schedule 40 Pipe
MAX. WORKING PRESSURE	360 PSI (25 Bar)
MAX. AMBIENT TEMP.	104° F (40° C)
LIQUID TEMP. RANGE	+5° F to +250° F (-15° C to 121° C)
MOTOR OPTIONS	TEFC or ODP
CONSTRUCTION MATERIALS	See Page 29

2" (51) ANSI. 250 lb. (113 kg) 8-Bolt Flange

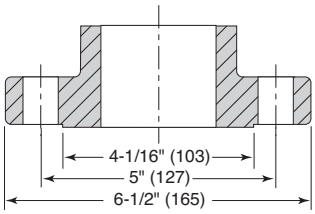

Model Number	HP (kW)	Motor S.F.	ph	Volts	Frame Size	Disc. Size in Inches (mm)	Suction Size in Inches (mm)	Sleeve in Inches (mm)	Dimensions in Inches (mm)*						TEFC Wt. Lbs. (kg)
									A	B	C	D	E	F	
PVM16-30/2D	3 (2.24)	1.4	1	110/220	213TCZ	2 (51)	2 (51)	5.71 (145)	15.8 (401)	13.9 (353)	7.9 (201)	2.6 (66)	32.3 (820)	10.0 (254)	189 (86)
PVM16-30/2D	3 (2.24)	1.4	3	190/380	184TCZ	2 (51)	2 (51)	5.71 (145)	15.8 (401)	12.6 (320)	6.9 (175)	2.6 (66)	31.0 (787)	8.6 (218)	163 (74)
PVM16-30D	5 (3.73)	1.4	1	110/220	213TCZ	2 (51)	2 (51)	5.71 (145)	17.6 (447)	13.9 (353)	7.9 (201)	2.6 (66)	34.1 (866)	10.0 (254)	204 (93)
PVM16-30D	5 (3.73)	1.4	3	190/380	213TCZ	2 (51)	2 (51)	5.71 (145)	17.6 (447)	13.9 (353)	8.1 (206)	2.6 (66)	34.1 (866)	10.3 (262)	208 (94)
PVM16-40D	5 (3.73)	1.4	1	110/220	213TCZ	2 (51)	2 (51)	7.48 (190)	19.4 (493)	13.9 (353)	7.9 (201)	2.6 (66)	35.9 (912)	10.0 (254)	206 (93)
PVM16-40D	5 (3.73)	1.4	3	190/380	213TCZ	2 (51)	2 (51)	7.48 (190)	19.4 (493)	13.9 (353)	8.1 (206)	2.6 (66)	35.9 (912)	10.3 (262)	210 (95)
PVM16-50D	7.5 (5.59)	1.15	1	110/220	215TCZ	2 (51)	2 (51)	9.25 (235)	21.1 (536)	13.9 (353)	7.9 (201)	3.1 (79)	38.1 (968)	10.0 (254)	239 (109)
PVM16-50D	7.5 (5.59)	1.15	3	190/380	215TCZ	2 (51)	2 (51)	9.25 (235)	21.1 (536)	14.2 (361)	8.1 (206)	3.1 (79)	38.4 (975)	10.3 (262)	236 (107)
PVM16-60D	10 (7.46)	1.15	3	190/380	254TCZ	2 (51)	2 (51)	11.02 (280)	23.4 (594)	20.0 (508)	9.5 (241)	4.0 (102)	47.4 (1204)	12.9 (328)	327 (148)
PVM16-70D	10 (7.46)	1.15	3	190/380	254TCZ	2 (51)	2 (51)	12.80 (325)	25.2 (640)	20.0 (508)	9.5 (241)	4.0 (102)	49.2 (1250)	12.9 (328)	328 (149)
PVM16-80D	10 (7.46)	1.15	3	190/380	254TCZ	2 (51)	2 (51)	14.57 (370)	27.0 (686)	20.0 (508)	9.5 (241)	4.0 (102)	51.0 (1295)	12.9 (328)	330 (150)
PVM16-90D	15 (11.19)	1.15	3	190/380	254TCZ	2 (51)	2 (51)	16.34 (415)	28.7 (729)	16.9 (429)	9.2 (234)	3.8 (97)	49.4 (1255)	11.5 (292)	374 (170)
PVM16-100D	15 (11.19)	1.15	3	190/380	254TCZ	2 (51)	2 (51)	18.11 (460)	30.5 (775)	16.9 (429)	9.2 (234)	3.8 (97)	51.2 (1300)	11.5 (292)	376 (170)
PVM16-110D	20 (14.91)	1.15	3	190/380	284TCZ	2 (51)	2 (51)	19.88 (505)	31.6 (803)	20.0 (508)	9.5 (241)	3.0 (76)	54.6 (1387)	13.3 (338)	393 (178)
PVM16-120D	20 (14.91)	1.15	3	190/380	284TCZ	2 (51)	2 (51)	21.65 (550)	33.4 (848)	20.0 (508)	9.5 (241)	3.0 (76)	56.4 (1433)	13.3 (338)	395 (179)
PVM16-130D	20 (14.91)	1.15	3	190/380	284TCZ	2 (51)	2 (51)	23.43 (595)	35.2 (894)	20.0 (508)	9.5 (241)	3.0 (76)	58.2 (1478)	13.3 (338)	396 (180)
PVM16-140D	20 (14.91)	1.15	3	190/380	284TCZ	2 (51)	2 (51)	25.20 (640)	36.9 (937)	20.0 (508)	9.5 (241)	3.0 (76)	59.9 (1521)	13.3 (338)	398 (180)
PVM16-160D	20 (14.91)	1.15	3	190/380	284TCZ	2 (51)	2 (51)	28.74 (730)	40.5 (1029)	20.0 (508)	9.5 (241)	3.0 (76)	63.5 (1613)	13.3 (338)	401 (182)

*Measurements represent the largest number possible for each model using standard efficiency motors.

© 2013 Pentair Ltd.

AURORA PVMX16 SERIES

DIMENSIONS AND SPECIFICATIONS
316 SS CONSTRUCTION
3 – 20 HP (2.24 – 14.91 kW) PUMPS

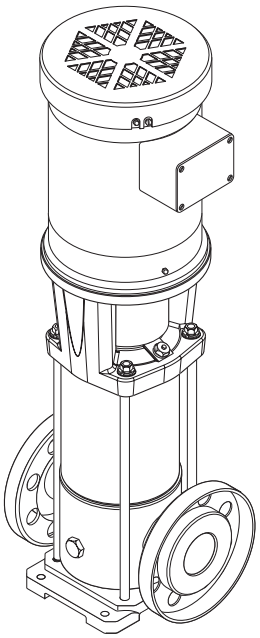

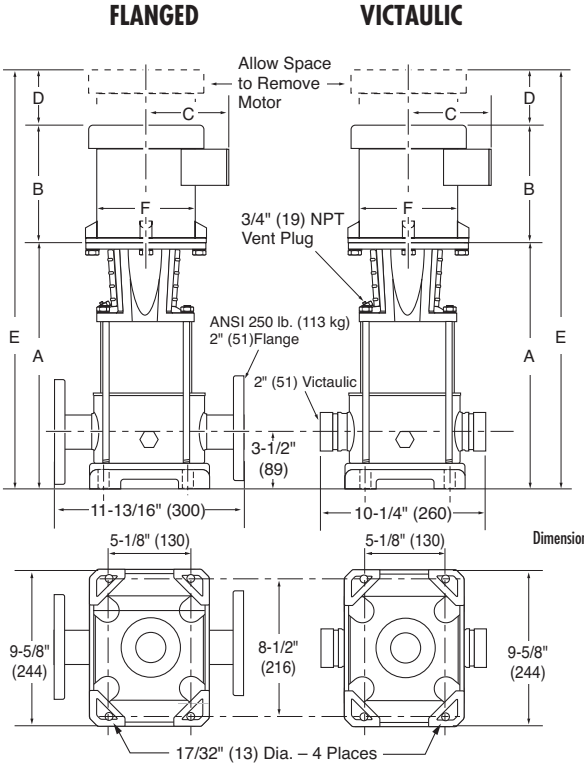

TECHNICAL INFORMATION	
MINIMUM PUMPING RATES	7.08 GPM (26.8 LPM)
FLOW RANGE	7.08 – 87.5 GPM (26.8 – 331.2 LPM)
MIN. SUCTION PIPE SIZES	2" (51 mm) Nominal Diameter, Schedule 40 Pipe
MAX. WORKING PRESSURE	360 PSI (25 Bar)
MAX. AMBIENT TEMP.	104° F (40° C)
LIQUID TEMP. RANGE	+5° F to +250° F (-15° C to 121° C)
MOTOR OPTIONS	TEFC or ODP
CONSTRUCTION MATERIALS	See Page 29

Dimensions in ( ) are in mm.

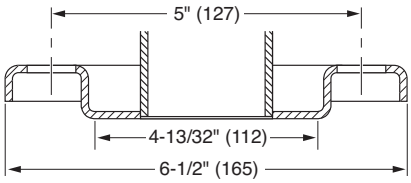

Model Number	HP (kW)	Motor S.F.	ph	Volts	Frame Size	Disc. Size in Inches (mm)	Suction Size in Inches (mm)	Sleeve in Inches (mm)	Dimensions in Inches (mm)* A	B	C	D	E	F	TEFC Wt. Lbs. (kg)
PVM(I/X)16-30/2D	3 (2.24)	1.4	1	110/220	213TCZ	2 (51)	2 (51)	5.71 (145)	15.8 (401)	13.9 (353)	7.9 (201)	2.6 (66)	32.3 (820)	10.0 (254)	166 (75)
PVM(I/X)16-30/2D	3 (2.24)	1.4	3	190/380	184TCZ	2 (51)	2 (51)	5.71 (145)	15.8 (401)	12.6 (320)	6.9 (175)	2.6 (66)	31.0 (787)	8.6 (218)	140 (64)
PVM(I/X)16-30D	5 (3.73)	1.4	1	110/220	213TCZ	2 (51)	2 (51)	5.71 (145)	17.6 (447)	13.9 (353)	7.9 (201)	2.6 (66)	34.1 (866)	10.0 (254)	182 (82)
PVM(I/X)16-30D	5 (3.73)	1.4	3	190/380	213TCZ	2 (51)	2 (51)	5.71 (145)	17.6 (447)	13.9 (353)	8.1 (206)	2.6 (66)	34.1 (866)	10.3 (262)	186 (84)
PVM(I/X)16-40D	5 (3.73)	1.4	1	110/220	213TCZ	2 (51)	2 (51)	7.48 (190)	19.4 (493)	13.9 (353)	7.9 (201)	2.6 (66)	35.9 (912)	10.0 (254)	183 (83)
PVM(I/X)16-40D	5 (3.73)	1.4	3	190/380	213TCZ	2 (51)	2 (51)	7.48 (190)	19.4 (493)	13.9 (353)	8.1 (206)	2.6 (66)	35.9 (912)	10.3 (262)	187 (85)
PVM(I/X)16-50D	7.5 (5.59)	1.15	1	110/220	215TCZ	2 (51)	2 (51)	9.25 (235)	21.1 (536)	13.9 (353)	7.9 (201)	3.1 (79)	38.1 (968)	10.0 (254)	217 (98)
PVM(I/X)16-50D	7.5 (5.59)	1.15	3	190/380	215TCZ	2 (51)	2 (51)	9.25 (235)	21.1 (536)	14.2 (361)	8.1 (206)	3.1 (79)	38.4 (975)	10.3 (262)	214 (97)
PVM(I/X)16-60D	10 (7.46)	1.15	3	190/380	254TCZ	2 (51)	2 (51)	11.02 (280)	23.4 (594)	20.0 (508)	9.5 (241)	4.0 (102)	47.4 (1204)	12.9 (328)	304 (138)
PVM(I/X)16-70D	10 (7.46)	1.15	3	190/380	254TCZ	2 (51)	2 (51)	12.80 (325)	25.2 (640)	20.0 (508)	9.5 (241)	4.0 (102)	49.2 (1250)	12.9 (328)	306 (139)
PVM(I/X)16-80D	10 (7.46)	1.15	3	190/380	254TCZ	2 (51)	2 (51)	14.57 (370)	27.0 (686)	20.0 (508)	9.5 (241)	4.0 (102)	51.0 (1295)	12.9 (328)	307 (139)
PVM(I/X)16-90D	15 (11.19)	1.15	3	190/380	254TCZ	2 (51)	2 (51)	16.34 (415)	28.7 (729)	16.9 (429)	9.2 (234)	3.8 (97)	49.4 (1255)	11.5 (292)	352 (160)
PVM(I/X)16-100D	15 (11.19)	1.15	3	190/380	254TCZ	2 (51)	2 (51)	18.11 (460)	30.5 (775)	16.9 (429)	9.2 (234)	3.8 (97)	51.2 (1300)	11.5 (292)	353 (160)
PVM(I/X)16-110D	20 (14.91)	1.15	3	190/380	284TCZ	2 (51)	2 (51)	19.88 (505)	31.6 (803)	20.0 (508)	9.5 (241)	3.0 (76)	54.6 (1387)	13.3 (338)	371 (168)
PVM(I/X)16-120D	20 (14.91)	1.15	3	190/380	284TCZ	2 (51)	2 (51)	21.65 (550)	33.4 (848)	20.0 (508)	9.5 (241)	3.0 (76)	56.4 (1433)	13.3 (338)	372 (169)
PVM(I/X)16-130D	20 (14.91)	1.15	3	190/380	284TCZ	2 (51)	2 (51)	23.43 (595)	35.2 (894)	20.0 (508)	9.5 (241)	3.0 (76)	58.2 (1478)	13.3 (338)	374 (170)
PVM(I/X)16-140D	20 (14.91)	1.15	3	190/380	284TCZ	2 (51)	2 (51)	25.20 (640)	36.9 (937)	20.0 (508)	9.5 (241)	3.0 (76)	59.9 (1521)	13.3 (338)	375 (170)
PVM(I/X)16-160D	20 (14.91)	1.15	3	190/380	284TCZ	2 (51)	2 (51)	28.74 (730)	40.5 (1029)	20.0 (508)	9.5 (241)	3.0 (76)	63.5 (1613)	13.3 (338)	378 (172)

*Measurements represent the largest number possible for each model using standard efficiency motors.

© 2013 Pentair Ltd.

AURORA PVM32 SERIES

DIMENSIONS AND SPECIFICATIONS

CAST IRON CONSTRUCTION

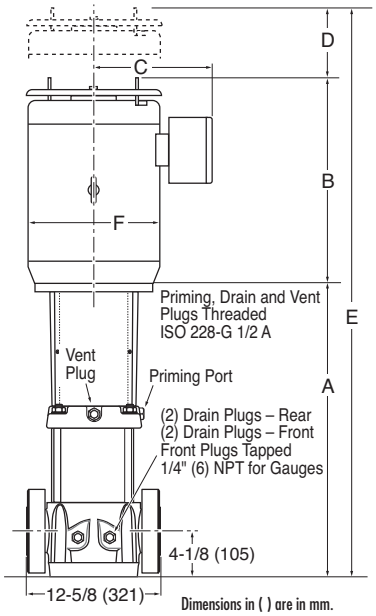

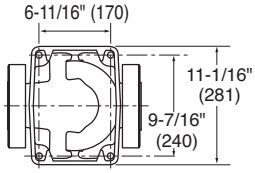

ANSI 300# 2-1/2" (64) 8-Bolt Flange
(6-11 Stage Pumps)

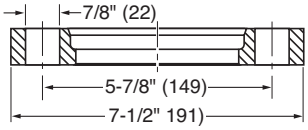

ANSI 150# 2-1/2" (64) 4-Bolt Flange
(1-5 Stage Pumps)

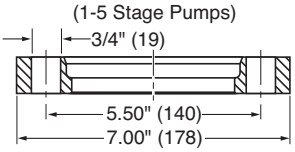

TECHNICAL INFORMATION	
MINIMUM PUMPING RATES	Up to 175° F (79° C) – 12.5 GPM (47.3 LPM) 175° F (79° C) to 250° F (121° C) – 29 GPM (109.8 LPM)
FLOW RANGE	12.5 – 175 GPM (12.5 – 662.4 LPM)
MIN. SUCTION PIPE SIZES	2-1/2" (64 mm) Nominal Diameter, Schedule 40 Pipe
MAX. WORKING PRESSURE	435 PSI
MAX. AMBIENT TEMP.	104° F (40° C)
LIQUID TEMP. RANGE	+5° F to +250° F (-15° C to 121° C)
MOTOR OPTIONS	TEFC or ODP Single or Three Phase For other options, consult factory.
CONSTRUCTION MATERIALS	See Page 37

Model Number	HP (kW)	Motor S.F.	ph	Volts	Frame Size	Disc. Size in Inches (mm)	Suction Size in Inches (mm)	Sleeve in Inches (mm)	Dimensions in Inches (mm)*						TEFC Wt. Lbs. (kg)
									A	B	C	D	E	F	
PVM32-1-1D	2 (1.49)	1.4	1	110/220	182TCZ	2.5 (64)	2.5 (64)	3.78 (96)	22.3 (566)	13.9 (353)	7.9 (201)	2.6 (66)	38.8 (986)	10.0 (254)	186 (85)
PVM32-1-1D	2 (1.49)	1.4	3	190/380	182TCZ	2.5 (64)	2.5 (64)	3.78 (96)	22.3 (566)	12.6 (320)	6.9 (175)	2.6 (66)	37.5 (953)	8.6 (218)	166 (76)
PVM32-1D	3 (2.24)	1.4	1	110/220	213TCZ	2.5 (64)	2.5 (64)	3.78 (96)	22.3 (566)	13.9 (353)	7.9 (201)	2.6 (66)	38.8 (986)	10.0 (254)	220 (100)
PVM32-1D	3 (2.24)	1.4	3	190/380	184TCZ	2.5 (64)	2.5 (64)	3.78 (96)	22.3 (566)	12.6 (320)	6.9 (175)	2.6 (66)	37.5 (953)	8.6 (218)	181 (82)
PVM32-2-2D	5 (3.73)	1.4	1	110/220	213TCZ	2.5 (64)	2.5 (64)	6.54 (166)	27.0 (686)	13.9 (353)	7.9 (201)	2.6 (66)	43.5 (1105)	10.0 (254)	236 (107)
PVM32-2-2D	5 (3.73)	1.4	3	190/380	213TCZ	2.5 (64)	2.5 (64)	6.54 (166)	27.0 (686)	13.9 (353)	8.1 (206)	2.6 (66)	43.5 (1105)	10.3 (262)	240 (109)
PVM32-2-1D	5 (3.73)	1.4	1	110/220	213TCZ	2.5 (64)	2.5 (64)	6.54 (166)	27.0 (686)	13.9 (353)	7.9 (201)	2.6 (66)	43.5 (1105)	10.0 (254)	236 (107)
PVM32-2-1D	5 (3.73)	1.4	3	190/380	213TCZ	2.5 (64)	2.5 (64)	6.54 (166)	27.0 (686)	13.9 (353)	8.1 (206)	2.6 (66)	43.5 (1105)	10.3 (262)	240 (109)
PVM32-2D	5 (3.73)	1.4	1	110/220	213TCZ	2.5 (64)	2.5 (64)	6.54 (166)	27.0 (686)	13.9 (353)	7.9 (201)	2.6 (66)	43.5 (1105)	10.0 (254)	236 (107)
PVM32-2D	5 (3.73)	1.4	3	190/380	213TCZ	2.5 (64)	2.5 (64)	6.54 (166)	27.0 (686)	13.9 (353)	8.1 (206)	2.6 (66)	43.5 (1105)	10.3 (262)	240 (109)
PVM32-3-2D	7.5 (5.59)	1.15	1	110/220	215TCZ	2.5 (64)	2.5 (64)	9.29 (236)	29.8 (757)	13.9 (353)	7.9 (201)	3.1 (79)	46.8 (1189)	10.0 (254)	269 (122)
PVM32-3-2D	7.5 (5.59)	1.15	3	190/380	215TCZ	2.5 (64)	2.5 (64)	9.29 (236)	29.8 (757)	14.2 (361)	8.1 (206)	3.1 (79)	47.1 (1196)	10.3 (262)	266 (121)
PVM32-3D	10 (7.46)	1.15	3	190/380	254TCZ	2.5 (64)	2.5 (64)	9.29 (236)	29.8 (757)	20.0 (508)	9.5 (241)	4.0 (102)	53.8 (1367)	12.9 (328)	357 (162)
PVM32-4-2D	10 (7.46)	1.15	3	190/380	254TCZ	2.5 (64)	2.5 (64)	12.05 (306)	32.5 (826)	20.0 (508)	9.5 (241)	4.0 (102)	56.5 (1435)	12.9 (328)	360 (163)
PVM32-4D	10 (7.46)	1.15	3	190/380	254TCZ	2.5 (64)	2.5 (64)	12.05 (306)	32.5 (826)	20.0 (508)	9.5 (241)	4.0 (102)	56.5 (1435)	12.9 (328)	360 (163)
PVM32-5-2D	15 (11.19)	1.15	3	190/380	254TCZ	2.5 (64)	2.5 (64)	14.80 (376)	35.3 (897)	16.9 (429)	9.2 (234)	3.8 (97)	56.0 (1422)	11.5 (292)	406 (184)
PVM32-5D	15 (11.19)	1.15	3	190/380	254TCZ	2.5 (64)	2.5 (64)	14.80 (376)	35.3 (897)	16.9 (429)	9.2 (234)	3.8 (97)	56.0 (1422)	11.5 (292)	406 (184)
PVM32-6-2D	20 (14.91)	1.15	3	190/380	284TCZ	2.5 (64)	2.5 (64)	17.56 (446)	38.0 (965)	20.0 (508)	9.5 (241)	3.0 (76)	61.0 (1549)	13.3 (338)	425 (193)
PVM32-6D	20 (14.91)	1.15	3	190/380	284TCZ	2.5 (64)	2.5 (64)	17.56 (446)	38.0 (965)	20.0 (508)	9.5 (241)	3.0 (76)	61.0 (1549)	13.3 (338)	425 (193)
PVM32-7-2D	20 (14.91)	1.15	3	190/380	284TCZ	2.5 (64)	2.5 (64)	20.31 (516)	40.8 (1036)	20.0 (508)	9.5 (241)	3.0 (76)	63.8 (1621)	13.3 (338)	428 (194)
PVM32-7D	25 (18.64)	1.15	3	190/380	284TCZ	2.5 (64)	2.5 (64)	20.31 (516)	40.8 (1036)	23.9 (607)	13.1 (333)	3.0 (76)	67.7 (1720)	15.6 (396)	441 (200)
PVM32-8-2D	25 (18.64)	1.15	3	190/380	284TCZ	2.5 (64)	2.5 (64)	23.07 (586)	43.6 (1107)	23.9 (607)	13.1 (333)	3.0 (76)	70.5 (1791)	15.6 (396)	444 (201)
PVM32-8D	25 (18.64)	1.15	3	190/380	284TCZ	2.5 (64)	2.5 (64)	23.07 (586)	43.6 (1107)	23.9 (607)	13.1 (333)	3.0 (76)	70.5 (1791)	15.6 (396)	444 (201)
PVM32-9-2D	30 (22.37)	1.15	3	190/380	284TCZ	2.5 (64)	2.5 (64)	25.83 (656)	46.3 (1176)	23.2 (589)	13.1 (333)	3.0 (76)	72.5 (1842)	15.6 (396)	447 (203)
PVM32-9D	30 (22.37)	1.15	3	190/380	284TCZ	2.5 (64)	2.5 (64)	25.83 (656)	46.3 (1176)	23.2 (589)	13.1 (333)	3.0 (76)	72.5 (1842)	15.6 (396)	434 (197)
PVM32-10-2D	30 (22.37)	1.15	3	190/380	284TCZ	2.5 (64)	2.5 (64)	28.58 (726)	49.1 (1247)	23.2 (589)	13.1 (333)	3.0 (76)	75.3 (1913)	15.6 (396)	436 (198)
PVM32-10D	30 (22.37)	1.15	3	190/380	284TCZ	2.5 (64)	2.5 (64)	28.58 (726)	49.1 (1247)	23.2 (589)	13.1 (333)	3.0 (76)	75.3 (1913)	15.6 (396)	436 (198)
PVM32-11-2D	30 (22.37)	1.15	3	190/380	284TCZ	2.5 (64)	2.5 (64)	31.34 (796)	51.8 (1316)	23.2 (589)	13.1 (333)	3.0 (76)	78.0 (1981)	15.6 (396)	439 (199)
PVM32-11D	30 (22.37)	1.15	3	190/380	284TCZ	2.5 (64)	2.5 (64)	31.34 (796)	51.8 (1316)	23.2 (589)	13.1 (333)	3.0 (76)	78.0 (1981)	15.6 (396)	439 (199)
PVM32-12-2D	30 (22.37)	1.15	3	190/380	284TCZ	2.5 (64)	2.5 (64)	34.09 (866)	54.6 (1387)	23.2 (589)	13.1 (333)	3.0 (76)	80.8 (2052)	15.6 (396)	442 (200)
PVM32-12D	30 (22.37)	1.15	3	190/380	284TCZ	2.5 (64)	2.5 (64)	34.09 (866)	54.6 (1387)	23.2 (589)	13.1 (333)	3.0 (76)	80.8 (2052)	15.6 (396)	442 (200)
PVM32-13-2D	30 (22.37)	1.15	3	190/380	284TCZ	2.5 (64)	2.5 (64)	36.85 (936)	57.3 (1455)	23.2 (589)	13.1 (333)	3.0 (76)	83.5 (2121)	15.6 (396)	444 (202)
PVM32-13D	30 (22.37)	1.15	3	190/380	284TCZ	2.5 (64)	2.5 (64)	36.85 (936)	57.3 (1455)	23.2 (589)	13.1 (333)	3.0 (76)	83.5 (2121)	15.6 (396)	444 (202)
PVM32-14-2D	30 (22.37)	1.15	3	190/380	284TCZ	2.5 (64)	2.5 (64)	39.61 (1006)	60.1 (1527)	23.2 (589)	13.1 (333)	3.0 (76)	86.3 (2192)	15.6 (396)	447 (203)
PVM32-14D	30 (22.37)	1.15	3	190/380	284TCZ	2.5 (64)	2.5 (64)	39.61 (1006)	60.1 (1527)	23.2 (589)	13.1 (333)	3.0 (76)	86.3 (2192)	15.6 (396)	447 (203)

*Measurements represent the largest number possible for each model using standard efficiency motors.

© 2013 Pentair Ltd.